POLICIES

Greater Grand Sudbury
www.greatersudbury.ca

INTEROFFICE MEMO

February 9, 2010

TO: BUILDING SERVICES TECHNICAL STAFF

FROM: G. A. Mazza

RE: By-law 2010-14 Amending By-law 2009-101
Clearing of Yards & Certain Vacant Lots

Attached for your information is a copy of the above noted amending by-law with the change to the definition of "Swimming Pool".

If you have any questions or concerns, please do not hesitate to contact me.

G. A. MAZZA, P. ENG.
DIRECTOR OF BUILDING SERVICES/
CHIEF BUILDING OFFICIAL

/vk
Attachment

B. Gutjahr
G Mazza
Policy

RECEIVED

FEB 0 9 2010

OFFICE OF
CHIEF BUILDING OFFICIAL

BY-LAW 2010-14

A BY-LAW OF THE CITY OF GREATER SUDBURY TO AMEND BY-LAW 2009-101, A BY-LAW OF THE CITY OF GREATER SUDBURY TO REQUIRE THE CLEARING OF YARDS AND CERTAIN VACANT LOTS

AND WHEREAS the Council of the City of Greater Sudbury deems it desirable to amend By-law 2009-101, a By-law to Require the Clearing of Yards and Certain Vacant Lots;

NOW THEREFORE THE COUNCIL OF THE CITY OF GREATER SUDBURY HEREBY ENACTS AS FOLLOWS:

1. By-law 2009-101 of the City of Greater Sudbury, a By-law to Require the Clearing of Yards and Certain Vacant Yards is amended by adding to Subsection (1) immediately after the definition of "Refuse" and immediately before the definition of "Vacant Lot", the following definition of "Swimming Pool":

   "Swimming Pool" means a structure which is located on or in or above the ground and which is capable of containing an artificial body of water for swimming, wading, diving or recreational bathing with a water depth of 0.6 metres or more at its deepest point;"

2. By-law 2009-101 of the City of Greater Sudbury, a By-law to Require the Clearing of Yards and Certain Vacant Yards is further amended by repealing Section 9 and enacting the following Section 9 in its place and stead:

   "Swimming Pool

   9. No owner who has a swimming pool in his or her yard shall fail to:

      (a) keep or maintain the swimming pool in an operational condition;

      (b) maintain the water in the swimming pool such that the water is not discoloured; or

2

(c) maintain the water in the swimming pool in a condition which is not malodorous."

3. This By-law shall come into force and take effect immediately upon final passage.

READ AND PASSED IN OPEN COUNCIL this 27th day of January, 2010

DEPUTY Mayor

A. Haché Clerk

3

From: Corrie-Jo Delwo
To: Building Services Staff - Inside; Dennis Lenzi; Paul Sajatovic
Date: 2/10/2010 10:03 AM
Subject: NDCA Circulation of Approvals Procedure

Attached please find the final procedure for circulation of approvals to the NDCA office. If you have any questions, please don't hesitate to ask. Corrie.

Corrie-Jo Delwo
Coordinator of Permits & Approvals Integration
Growth & Development/Building Services, City of Greater Sudbury
705-674-4455, ext. 4426
Fax: 705-675-1075
Cell: 705-665-4720
cj.delwo@city.greatersudbury.on.ca

Greater Grand Sudbury
www.greatersudbury.ca

PROCEDURE DOCUMENTATION

TITLE: Nickel District Conservation Authority Approval Circulation

Effective Date: Immediately

Revised Date: November 5, 2009

PURPOSE: To provide direction to staff in determining which building permit applications should be forwarded to the NDCA for comments

PROCEDURE

The following procedure has been developed to assist you in determining which building permit applications should be forwarded to the NDCA for comments.

All building permit applications will be circulated to NDCA for comments except for the following:

- Fire damage repairs, except for major rebuilds
- Fireplaces and chimneys
- Insurance claims
- Interior renovations, except for finished basements
- Plumbing retrofits
- Roof repairs
- Weeping Tiles
- 2nd storey additions

Circulation of building permit applications requiring SPCA is not required unless a "conditional" permit is requested by the applicant.

On behalf of the NDCA, a user fee of $23.00 [subject to an Annual Inflationary Increase on January 1st of every year as per By-law 2009-1F, Part 8, Subsection 18(1)] will be collected for reviewing and commenting on building permit applications.

HISTORY

The Nickel District Conservation Authority (N.D.C.A.) is in the business of managing watersheds. The City of Greater Sudbury is connected by watersheds; actions taken, either positive or negative, can impact the health of the entire watershed. The NDCA operates under the authority of the Ontario Conservation Authorities Act and are thus deemed as applicable law (Division A, Part 1, Section 1.4.1.3 of the Ontario Building Code regulation).

Ensuring that homes and people are protected from the threats of flooding and erosion is the most important activity undertaken by the N.D.C.A. and all Conservation Authorities. Plans for new homes and developments are carefully reviewed and criteria set to ensure people, property, and natural features, are properly protected from the potentially life threatening impacts of these natural hazards.

It was established on December 10, 1997, when a building permit application is being circulated to the NDCA for comments, that a copy of our zoning maps be attached to our approval requests. These zoning maps provided information as to whether or not a particular property was within a watershed area.

At that time a new procedure was implemented that all residential applications for new and interior renovations (as it relates to finishing a basement) and all construction occurring on waterfront properties be circulated to the NDCA for comments, except for decks, pools, sheds, roof repairs, windows & door replacement, siding, weeping tiles, and 2nd storey additions.

5

Greater | Grand Sudbury
www.greatersudbury.ca

PROCEDURE DOCUMENTATION

TITLE: Nickel District Conservation Authority Approval Circulation

Effective Date: Immediately
Revised Date: November 5, 2009

PURPOSE: To provide direction to staff in determining which building permit applications should be forwarded to the NDCA for comments

On January 21, 1998 a memo was circulated to Permit Customer Services Clerks advising them to circulate to NDCA all residential building applications for new and interior renovations (as it relates to finishing a basement), including accessory buildings such as garages, storage buildings and barns regardless of whether they are situated in a flood plain or not.

On February 18, 1998 accessory structures larger than 200 sq.ft. were requested to be circulated to the NDCA for comments.

On May 1, 2002 a revised procedure was circulated to staff outlining that all building permit applications for new construction and interior renovations for finished basements be forwarded to the NDCA for comments. Staff was also instructed to send all approvals for accessory structures and including accessory structures under 200 sq.ft., decks, and pools that were near a water body, to the NDCA for comments.

On November 4, 2009, a meeting was held between Building Services and NDCA where it was established that because the zoning maps have not been revised and the watershed areas are not clearly defined and is creating problems for Building Services staff to determine if a property lies within a flood zone (the zoning maps are being revised and will not be available to staff until fall of 2010 along with the Zoning By-law), all building permit applications will be circulated to NDCA for comments except for the following:

- Fire damage repairs, except for major rebuilds
- Fireplaces and chimneys
- Insurance claims
- Interior renovations, except for finished basements
- Plumbing retrofits
- Roof repairs
- Weeping Tiles
- 2nd storey additions

REFERENCES

Memos to Permit Customer Services Clerks dated December 10, 1997, January 21, 1998 and February 18, 1998; Procedure No. EDPS.PS.BS.PSC.1.0 dated May 1, 2002; Ontario Building Code, 2006; By-law 2009-1F, Miscellaneous User Fees, dated January 14, 2009

SIGNATURES:

Guido Mazza, P.Eng., Director of Building Services/CBO	**Andre Guillot, Acting Manager of Code Compliance/Deputy CBO**	**Corrie-Jo Delwo, Coordinator of Permits & Approvals Integration**

6

Rec'd. May 1/02 from Gisele Martin

Sudbury	**PROCEDURE DOCUMENTATION**	**Procedure No.**	**EDPS.PS.BS.PSC. 1.0**
		No. of Pages: 2	**Page No.: 1**

TITLE: Collection of New User Fee
Nickel District Conservation Authority (NDCA)

Effective Date:		
Revised Date:		
Department	Economic Development & Planning Services	EDPS
Division	Planning Services	PS
Section	Building Services	BS
Group(s)	Permit Services	PS
Position	Permit Services Clerks	PSC

PURPOSE:

To provide for the collection of fees at the building permit stage on behalf of the Nickel District Conservation Authority

PROCEDURE

Building Services will be responsible for collecting a new user fee in the amount of $35 on behalf of the NDCA for reviewing and commenting on building permit applications.

The following procedures were developed to assist you in determining which building permit applications should be forwarded to the NDCA for comments.

Generally, <u>all building permit applications will be circulated</u> to NDCA for comments <u>except for the following:</u>

- accessory buildings under 200 sq.ft*
- decks*
- fences*
- fire damage repairs, except for major rebuilds
- fireplaces and chimneys
- insurance claims
- interior renovations, except for finished basement**
- plumbing retrofits
- pools*
- roof repairs

HISTORY

Reductions in provincial funding has prompted the NDCA to impose user fees for reviewing and commenting on all planning applications.

At their General Board meeting on March 20, 2002, the NDCA reaffirmed a resolution previously passed by their Board on February 13, 2002 approving the implementation of new fee schedules for plan review services, effective April 2, 2002.

Planning and Building Services staff subsequently met with the NDCA to further discuss the impact these fees will have on our application process and customer service.

Additional staff meetings were held and a protocol for processing various planning applications was developed and subsequently reviewed with the NDCA.

REFERENCES: Memos to Permit Services Clerks dated December 10, 1997, January 21, 1998 and February 18, 1998
NDCA's Plan Review Pre-consultation Response Form and Public Notice regarding collection of fees, including NDCA's Schedule of Fees and their General Board resolution implementing the 2002 Fee Schedule for plan review services.

				PREPARED BY:
Bill Lautenbach Division Head	Guido Mazza, P.Eng. Section Head	Rheal Pitre Manager of Technical Services		Gisèle Martin Co-ordinator of Quality Assurance Permits and Customer Service

7

Collection of New User Fee
Nickel District Conservation Authority (NDCA) - continued

- weeping tiles
- 2nd storey additions

* If proposed construction is near a water body, review with Manager of Technical Services to determine whether to circulate to NDCA.

** Permit Services Clerks will be required to take the following steps when processing an application for a <u>finished basement</u>:

a. <u>New application</u>

- Automatic circulation to NDCA

b. <u>Revising a current Building Permit for a Single Family Dwelling Or Seasonal Residence</u>

- Review previous comments received by NDCA with Manager of Technical Services in order to determine if circulation is necessary.

Circulation of building permit applications requiring SPCA is not required unless a "conditional" permit is requested by the applicant.

NDCA presently provides free consulting services to the public for proposed construction and/or requests for altering waterways. They will comment whether they have any concerns with the proposed construction on the attached " Plan Review Pre-consultation Response Form". The client will be provided with a signed original of this form to be submitted to Building Services when applying for a permit. **Depending on their response, circulation to NDCA may be required.**

If this form is not provided at the application stage, the Permit Services Clerk is to ask the applicant if he has consulted with the NDCA and proceed accordingly.

It is standard practice to collect building permit fees at the application stage. Permit Services Clerks are required to stamp "PAID" on the approval form prior to circulating to the NDCA.

HISTORY - continued

Staff also decided that the NDCA would collect their own fees.

NDCA's schedule of new fees for 2002 was presented to the Development Liaison Advisory Committee (DLAC) at their meeting on March 7, 2002.

The committee members voiced their concerns about the impact these fees would have on the public, particularly the City's "One-Stop-Shop" concept.

DLAC does not want applicants sent to the NDCA to pay this user fee. Staff were directed to collect these fees at the application stage.

Collection of New User Fee **Nickel District Conservation Authority (NDCA)** - continued	**HISTORY** - continued
A fee will not be charged if: ▸ construction is taking place in the newly annexed townships of Aylmer, Cleland, Dill, Dryden, MacKelcan, Parkin, Rathbun and Scadding; (circulation to NDCA must still take place) and ▸ circulation to NDCA is for a conditional permit. NDCA has prepared a Notice concerning their new user fees for distribution to applicants. The Building Permit System has been modified to enable staff to enter the fees being collected for NDCA into the Building Permit Fees Collection screen. The "transaction code" to be entered on fees screen is "ND". NDCA staff have been granted access to Option 3 - Building Permit Approvals on the Permit Application Menu in order to respond "on-line" to facilitate speedier replies. If NDCA approves an application with conditions, they will insert the word "CONDITIONAL" in the Description" field. Permit should not be issued until NDCA's comments are received. Building Services requires an original copy of signed document for our records. Attachments	
FEE: $35 per permit application	

B Lauterbach
P Sajatovic
S Jonasson
M L Gauvreau
E Stankiewicz
J Darmanin
J Wilkin
R Swiddle (2)
Binder

BY-LAW 2002-113F

BEING A BY-LAW OF THE CITY OF GREATER SUDBURY TO AMEND BY-LAW 2002-9F TO ESTABLISH FEES FOR CERTAIN APPLICATIONS AND SERVICES UNDER THE PLANNING ACT AND SERVICES PROVIDED BY THE ECONOMIC DEVELOPMENT AND PLANNING DEPARTMENT

WHEREAS the Council of the City of Greater Sudbury passed By-law 2002-9F to establish fees for certain applications and services under the *Planning Act*, and for services provided by the Economic Development and Planning Department;

NOW THEREFORE THE COUNCIL OF THE CITY OF GREATER SUDBURY HEREBY ENACTS AS FOLLOWS:

1. By-law 2002-9F is hereby amended by deleting therefrom Schedule "A" and replacing it with the attached Schedule "A".

2. The Director of Planning Services and Clerk are hereby authorized to enter into an Agreement with the Nickel District Conservation Authority for the collection and remittance of Nickel District Conservation Authority fees by the City of Greater Sudbury.

3. This By-law shall come into force and take effect on upon passage.

READ THREE TIMES AND PASSED IN OPEN COUNCIL this 25th day of April, 2002.

10

Interoffice Correspondence

H:RMANBC...\\WPDATA\ APPROVALS.MIN\REVISION.NDCA

February 18, 1998

MEMO TO: Corrie Caporale
Julie Forget
Lyne McInnes

FROM: Gisèle Martin, Supervisor
Building Permit Services

SUBJECT: **Circulation of Building Permit Applications to the NDCA Storage Building Construction Projects**

In consultation with the CBO, I wish to advise that building applications for the construction of storage buildings larger than 200 sq.ft. will be sent to

the NDCA for their comments. Any building smaller than 200 sq. ft. can therefore be considered a shed which you are not required to send to the NDCA for comments.

Hopefully the above information addresses your concerns.

c.c. G. Mazza
M. Tedeschi (FYI)
A. McCann

Interoffice Correspondence

H:RMANBC...\\WPDATA\ APPROVALS.MIN\NDCA.APP

January 21, 1998

MEMO TO: Corrie Caporale
Julie Forget
Lyne McInnes

FROM: Gisèle Martin, Supervisor
Building Permit Services

SUBJECT: **Circulation of Building Permit Applications to NDCA for Comments**

In reference to my memo dated December 10, 1998 regarding the above.

All residential building applications for new and interior renovations (as it relates to finishing a basement), **including accessory buildings such as garages, storage buildings and barns** will be circulated to the NDCA for comments **regardless of whether they are situated in a flood plain or not.**

Should you have any concerns wrt the above, be sure to let me know.

Gisèle

c.c. G. Mazza
M. Tedeschi (FYI)
A. McCann

file - procedures

Region of Sudbury

Interoffice Correspondence

December 10, 1997

H:RMANBC...\\WPDATA\ APPROVALS.MIN\NDCA.APP

MEMO TO: Corrie Caporale
Julie Forget
Lyne McInnes

FROM: Gisèle Martin, Supervisor
Building Permit Services

SUBJECT: Circulation of Building Permit Applications to NDCA for Comments

The result of a meeting held December 9, 1997 with NDCA staff has prompted a change in procedures as it relates to the circulation of building permit applications to the NDCA.

Effective immediately, all residential building applications for new and interior renovations (as it relates to finishing a basement) will be circulated to the NDCA for comments, except for the following works of construction:

- decks
- pools
- sheds
- roof repairs, door, siding, and window installation
- weeping tiles
- 2nd storrie addition

The NDCA has requested that a copy of our zoning map be attached to our approval requests to enable them to process these quickly.

All building permit applications for construction occurring on waterfront properties must also be circulated to the NDCA.

A formal procedure expanding on the above noted changes will be provided to you in due course.

Should you have any concerns wrt the above, be sure to let me know.

Gisèle

c.c. G. Mazza
M. Tedeschi (FYI)

Greater | Grand Sudbury
www.greatersudbury.ca

INTEROFFICE MEMO

October 6, 2009

TO: Building Services Technical Staff

FROM: G. A. Mazza

RE: O. Reg. 365/09 – Renewable Energy Approval

Attached for your information is a copy of a notification from David Brezer, Director and Chief Building Official, Ministry of Municipal Affairs & Housing regarding the above which is self explanatory.

If you have any questions, please do not hesitate to come and see me.

Guido Mazza/pr

G. A. MAZZA, P. ENG.
DIRECTOR OF BUILDING SERVICES/
CHIEF BUILDING OFFICIAL

GAM/vk

REGISTRAR OF REGULATIONS
Filed as O. Reg. 365/09
On
SEP 23 2009
Proposed source law publication dates:
e-Laws Sept 25/09
Ontario Gazette Oct 10/09

RECEIVED
OCT 06 2009
OFFICE OF
CHIEF BUILDING OFFICIAL

ONTARIO REGULATION

made under the

BUILDING CODE ACT, 1992

Amending O. Reg. 350/06

(Building Code)

Note: Ontario Regulation 350/06 has previously been amended. For the legislative history of the Regulation, see the Table of Consolidated Regulations – Detailed Legislative History at www.e-Laws.gov.on.ca.

1. Clause 1.4.1.3. (1) (a) of Division A of Ontario Regulation 350/06 is amended by adding the following subclause:

(vi.1) section 47.3 of the *Environmental Protection Act*, with respect to the issuance of a renewable energy approval,

2. This Regulation comes into force on the day on which subsection 4 (1) of Schedule G to the *Green Energy and Green Economy Act, 2009* comes into force.

From: Andre Guillot
To: Building Inspectors; Permit Services; Plans Examiners; Ron Liinamaa
Date: 4/27/2009 1:43:13 PM
Subject: Staff please note

As of Today , A Building Permit will be required for the following :

An elevated deck / stairs of more than 24 " above grade attached or detached providing principal access to a building .

Andre Guillot
Plans Examiner
CGS Building Services
674-4455, extension 4326
andre.guillot@city.greatersudbury.on.ca

CC: Corrie-Jo Delwo; Guido Mazza; Valerie Klotz

From: Bill McCaffrey
To: Alfio Mazzuchin; andre.guillot@city.greatersudbury.on.ca; bill yourth; Ed Picco; Eric Wong; Guido Mazza; Markku Makitalo; Rick Vincent; Sherri Budgell
Date: 1/22/2009 11:04:57 AM
Subject: fire damper / smoke damper

Lady and gentlemen;

As you are all aware we have been discussing the need for protection of openings in an un-rated fire separation; specifically duct or transfer grill openings.

There is no Code requirement for smoke dampers only fire dampers though there are UL rated smoke dampers available. The issue of concern is that in an assembly designed to protect against the passage of smoke does not fulfill its purpose with a fire damper that is typically actuated by heat not smoke.

I have contacted the Ministry and they confirmed that fire dampers meet the required method of protection for openings in an un-rated fire separation even though they may not immediately protect against the passage of smoke.

I was informed that there are ongoing discussions at the national level with regards to this issue.

In summary unless fire dampers are waived by 3.1.8.8., fire dampers are considered acceptable protection of transfer grill or duct openings in a fire separation designed for smoke control only.

Bill

Bill McCaffrey B.Comm.,CBCO
Plans Examiner
City of Greater Sudbury
705-674-4455 ext 4628
bill.mccaffrey@city.greatersudbury.on.ca

9.8.6.2. (December 11, 2006)

December 11, 2006

Dave Henderson
Director, Industry Relations
Ontario Home Builders' Association
20 Upjohn Rd., Suite 101
North York, Ontario M3B 2V9

Dear Mr. Henderson,

Thank you for your inquiry about landings in garages attached to dwelling units.

Sentences (1) to (3) of Article 9.8.6.2. of Division B of the 2006 Building Code state:

9.8.6.2. Required Landings

(1) Except as provided in Sentences (2) to (4) and Sentence 9.9.6.6.(2), a landing shall be provided

(a) at the top and bottom of each flight of interior and exterior stairs, including stairs in garages,
(b) at the top and bottom of every ramp with a slope greater than 1 in 50, and
(c) where a doorway opens onto a stair or ramp.

(2) Where a door at the top of a stair in a dwelling unit swings away from the stair, no landing is required between the doorway and the stair.

(3) Except for an entrance from an attached garage, a landing may be omitted at the top of an exterior stair serving a secondary entrance to a single dwelling unit, provided

(a) the stair does not contain more than 3 risers,
(b) except as provided in Clause (c), the door is a sliding door or swings away from the stair, and
(c) where a storm or screen door is provided, it may swing over the stair if it is equipped with hardware to hold it open.

Supplementary Standard SA-1 attributes the following functional statements and objectives to the requirements in this Article: [F30-OS3.1], [F10-OS3.7], where:

19

OS3.1 An objective of this Code is to limit the probability that, as a result of the design or construction of a building, a person in or adjacent to the building will be exposed to an Page 2 of 2 unacceptable risk of injury due to hazards caused by tripping, slipping, falling, contact, drowning or collision.

OS3.7 An objective of this Code is to limit the probability that, as a result of the design or construction of a building, a person in or adjacent to the building will be exposed to an unacceptable risk of injury due to hazards caused by persons being delayed in or impeded from moving to a safe place during an emergency.

F10 To facilitate the timely movement of persons to a safe place in an emergency.

F30 To minimize the risk of injury to persons as a result of tripping, slipping, falling, contact, drowning or collision. Sentence 9.8.6.2.(1) applies to all landings in all buildings regulated by Part 9 of Division B. It contains the general requirement that a landing is to be provided at the top and bottom of each flight of interior and exterior stairs, including stairs in garages. The basis for this requirement is set out in the above noted objectives and functional statements.

Sentences (2) and (3) contain exceptions to the general requirement of Sentence (1). According to Sentence (2), a landing is not required at the top of a stair provided the door in a dwelling unit swings away from the stair.

The exceptions in Sentence (3) are not generally applicable to stairs in an attached garage in a dwelling unit.

Therefore, the 2006 Building Code (and as was the case in the 1997 Building Code) does not require a landing between a door and the top of a stair in a garage in a dwelling unit, provided the door swings away from the stair.

Under the Building Code Act, 1992, the local principal authority has jurisdiction for enforcing the Act and the Building Code. Designers should consult with the local principal authority before taking any action.

Sincerely,

Alek Antoniuk, OAA Manager (Acting)

Last Modified: April 13, 2007

20

From: Ed Picco
To: Mazza, Guido
Date: 2/8/2008 12:07:38 PM
Subject: Pre-engineered components

As per our brief but informative meeting with Guido, Sherri and Markku we have come to a resolution to the problem of accepting permit applications without pre-engineered shop drawings being submitted.

We will **not** be accepting any more applications where pre-engineered components are required and not received.
As per the Chief Building Official/Director of Building Services request, drawings for the pre-engineered components must be submitted at the application stage with the building drawings (see Builders' Bulletin dated January 2008)
Failure to comply will result in an incomplete application. Applicant will be asked to return and re-apply once all pre-engineered shop drawings are received.
Thankyou. Have a good day.
Ed

CC: Alfio Mazzuchin; Andre Guillot; Angela Lanteigne; Bill McCaffrey; Cheryl Gazzola; Corrie-Jo Caporale; Donna Walli; Julie Forget; Markku Makitalo; Rachelle Rouleau; Richard Beaudry; Ron Liinamaa; Sherri Budgell; Valerie Klotz

BUILDERS' BULLETIN

HVAC Drawings & Pre-Engineered Components

JANUARY, 2008

HVAC DRAWINGS

BACKGROUND

As of January 1, 2006, the Ontario Ministry of Municipal Affairs required that any firm submitting designs of any type to municipalities in connection with a building permit must be registered and obtain a Ministry issued designer registration number (Building Code Identification Number or BCIN #). For example: registration requirements for designers who design HVAC systems for the new build market.

During the period of January 1, 2006 and December 31, 2007, the Chief Building Official/Director of Building Services of the City of Greater Sudbury has permitted the issuance of "Conditional Foundation and/or Structural Shell" permits pending the submission of HVAC drawings due to the lack of "registered" designers within the City of Greater Sudbury.

Further to the general agreement and discussion by the membership of the Development Liaison Advisory Committee (DLAC) on September 20, 2007, the following changes are being implemented to improve the efficiency and turn around times in Building Services:

ADDITIONAL FEES FOR CONDITIONAL PERMITS

As of January 1, 2008, as per By-law 2005-165, the Building Services Section will be applying an additional fee of $230.00 to Building Permit applications upon which the applicant has requested a "conditional permit" pending the submission of HVAC drawings:

> "A BY-LAW OF THE CITY OF GREATER SUDBURY RESPECTING CONSTRUCTION, DEMOLITION, CHANGE OF USE PERMITS, INSPECTIONS AND FEES (Schedule 'C'):
>
> Conditional Permit $230.00"

Under Subsection 8(3) of the Ontario Building Code Act it gives chief building officials discretionary power to consider and issue Conditional permits. Conditional permits are intended to expedite construction when planning approvals are met but not all plans for the building are completed. This allows construction to start before all plans have been completed.

22

Greater Grand Sudbury
www.greatersudbury.ca

BUILDERS' BULLETIN

HVAC Drawings & Pre-Engineered Components

JANUARY, 2008

PRE-ENGINEERED COMPONENTS

ADDITIONAL REQUIRED DOCUMENTATION

As of January 1, 2008, the Chief Building Official/Director of Building Services has requested that drawings for the following must be submitted at the application stage with the building drawings; failure to comply will result in an incomplete application and a building permit will not be issued until pre-engineered shop drawings are received:

Pre-engineered components (two copies):

Truss engineering package - truss layout/truss designs
Engineered floor system package - floor layout / beam design/ floor joist span table
Engineered beam design (Glu-lam, LVL Parallam)
Structural component not prescribed in Part 9 of the Ontario Building Code, qualified stamped design by an engineer to be provided. (e.g. beam with point load, lintels under trusses spanning over 32'2", railing systems beyond scope of SB7)

All drawings shall be to scale, dimensioned and provide sufficient information that describes the extent of proposed work.

25

From: Richard Beaudry
To: Building Services Office
Date: 2/27/2008 3:05:54 PM
Subject: Re : Barn Decision

To Staff,

Following is the interpretation of the setbacks for barns which was agreed upon by Planning, C/A and myself.

Under the 83-300 series by-laws and the 95-500Z by-law, it states in Rural and Agricultural Zones that barns must be 300 m (984') away from a residential building or residential zone.

The exception to this is when the structure is not associated with an intensive agricultural use, the setbacks of 300m do not apply.

Under the definitions " Agricultural Use, Intensive ", it states when breeding, raising, boarding or training dogs, cats, horses or ponies for gain or profit, that you must adhere to the 300m setbacks.

When an applicant makes application for a barn for his own horses which he uses for his own enjoyment and not boarding others, he does not fall under the 300m setback. He would only have to meet the regular setbacks for that particular zone of the by-law. Should he use the horses for gain or profit he would have to meet the 300m setbacks. Furthermore it goes on to state that should any future residential building be established as a main use in an A zone it must be 300m away (if the existing barn is an intensive agricultural use).

The Nutrient Management Act still comes into play when you exceed 5 nutrients, regardless of the setbacks.

It is important to ask the following questions when taking an application for a barn:
- is the barn an intensive agricultural use ?
- if the barn is for horses, is gain or profit present ?
- can the 300m setbacks be achieved ?
- is the applicant aware of the Nutrient Management Act ?

It is also important to fill out a zoning check list so as to not forget any details.

Should you require further information, please see me.

Thank you.

Richard.

From: Corrie-Jo Caporale
To: Permit Customer Services Clerks; Plans Examiners
Date: 6/6/2008 3:25:48 PM
Subject: Health Unit Approvals for Accessory Structures, Additions, Interior Alterations

FYI

I spoke with the Health Unit and verified that Health Unit Approval is only required when adding plumbing or additional bedrooms for additions & interior alterations.

For accessory structures: if distances from the accessory structure to the treatment unit (holding tank) exceed minimum clearances of 1.5 m (4.9 ft) and distances from the accessory structure to the distribution piping exceed minimum clearances of 5 m (16.4 ft), as listed in 8.2.1.6 A & B of the OBC, Health Unit approval would not be required provided applicant is certain of their field bed location and can indicate it on the plot plan.

Corrie-Jo Caporale
Coordinator of Permit Approvals & Integration
Growth & Development/Building Services
705-674-4455, ext. 4426

Greater | Grand Sudbury
www.greatersudbury.ca

INTEROFFICE MEMO

October 21, 2009

TO: All Building Services Staff

FROM: G. A. Mazza

RE: By-law 2009-216
Citizen Service By-law

Please find enclosed the latest Citizen Service By-law passed by Council on September 9, 2009. We are to ensure that we govern our dealings with our citizen clients in a manner that adheres to the policy and goals outlined therein, passed by Council.

Thank you for your anticipated cooperation in this manner.

Regards.

GAM/vk
Enc.

BY-LAW 2009-216

A BYLAW OF THE CITY OF GREATER SUDBURY TO ADOPT A CITIZEN SERVICE POLICY

WHEREAS the Council of the City of Greater Sudbury deems it advisable to adopt a Citizen Service Policy;

NOW THEREFORE THE COUNCIL OF THE CITY OF GREATER SUDBURY ENACTS AS FOLLOWS:

1. The Citizen Service policy as outlined in Schedule "A" to this By-law is hereby established for the City of Greater Sudbury.

2. By-law 2003-26A is hereby repealed.

3. This By-law shall come into force and take effect immediately upon the final passing thereof.

READ AND PASSED IN OPEN COUNCIL this 9th day of September, 2009

J. Rodrigues Mayor

A. Haché Clerk

SCHEDULE "A"

to By-law 2009-216 of the City of Greater Sudbury

CITIZEN SERVICE POLICY

PREAMBLE:

The City of Greater Sudbury is committed to creating a challenging and rewarding work environment in which employees are motivated to respond to the needs of our citizens by providing the highest quality service in all municipal facilities, programs and service areas. We exist to serve our community and our goal is to provide citizens with great service that consistently exceeds citizens' expectations.

"CAN DO" SERVICE:

The City of Greater Sudbury promotes a 'can do' attitude amongst employees. Staff are positive and empowered to make effective and pro-active decisions when dealing with citizens. They use their common sense along with their technical and professional knowledge to make timely and effective decisions. This ensures that service is responsive to unique needs while addressing core services, policies and safety standards.

Our employees go the extra mile for citizens by:

* actively greeting citizens and ensuring that staff are clearly identified;
* listening to citizens and valuing their individual needs, experiences and differences;
* treating all citizens fairly and equitably;
* working co-operatively;
* encouraging problem resolution;
* being accountable for our individual actions and decisions;
* taking ownership for achieving conclusion to an issue; and
* finding alternatives for the citizens when we cannot help.

As a corporation, we support risk taking and problem solving and encourage innovation within the framework and guidelines provided to us by Council. Corporately we foster an 'open for business' attitude and work to simplify procedures and eliminate red tape.

SERVICE STANDARDS:

The City of Greater Sudbury is committed to:

* Providing clear, concise and accurate information and resources in a professional, courteous and helpful manner and in a variety of ways - in person, by telephone, mail, facsimile, e-mail and on the City of Greater Sudbury website.

* Providing services in both official languages in response to community needs.

* Creating a welcoming atmosphere, acknowledging citizens immediately, responding promptly to messages and inquiries and providing citizens with information as to our availability. This can include strategies such as using the vacation rule on e-mail to advise of a return date and updating voice mail messages to reflect absences from the office.

* Continuously monitoring, evaluating and improving our service level and implementing a process to measure our successes and get feedback from citizens.

* Providing close and convenient community based access to municipal services in Citizen Service Centres and through e-government solutions.

* Ensuring that public offices and facilities are accessible to those with special needs.

* Embedding citizen service standards and performance measures in all business plans and supporting service excellence across all levels of the corporation.

CALL HANDLING PROTOCOLS:

The City of Greater Sudbury is committed to:

* Answering all incoming calls to the Call Centre with a live voice during regular business hours.

* Using call resolution techniques to minimize the number of times a call is transferred.

* Giving citizens the choice of having their calls transferred either to another individual or to voice mail when the specific person for whom they are calling is not available.

* Ensuring that no calls are left unanswered.

STAFF SUPPORT:

* We promote professionalism among all staff. Staff are expected to maintain an appropriate appearance and restrict food consumption and personal grooming in public view.

* We provide staff training to ensure that our employees have an acceptance and understanding of our corporate vision, mission, values, goals and priorities and excel in customer service.

* We consider customer service skills in making hiring decisions for positions with high levels of citizen contact.

ACCESSIBILITY:

The City of Greater Sudbury respects the independence, dignity, integration, and equality of opportunity of all citizens;

Citizens with disabilities may use support persons, personal assistive devices and service animals when accessing municipal programs, services and facilities;

Communication with a citizen with a disability will be done in a manner that takes into account the citizen's disability.

SCHEDULE "A"

to By-law 2009-216 of the City of Greater Sudbury

Accessibility – Implementation Plan and Strategies

The City of Greater Sudbury shall attempt to:

1. Establish policies, practices and procedures on providing goods or services to people with disabilities.

2. Use reasonable efforts to ensure that its policies, practices and procedures are consistent with the core principles of independence, dignity, integration and equality of opportunity.

3. Set a policy on allowing people to use their own personal assistive devices to access City goods and use City services and about any other measures the City offers to enable them to access City goods and use City services.

4. Communicate with a person with a disability in a manner that takes into account his or his disability.

5. Allow people with disabilities to be accompanied by their guide dogs or service animals in City premises that are open to the public, unless the animal is excluded by another law. If a service animal is excluded by law, the City shall use other measures to provide services to the person with a disability.

6. Permit people with disabilities who use a support person to bring that person with them while accessing goods or services in premises open to the public or third parties.

7. Where admission fees are charged, provide notice ahead of time on what admission, if any, would be charged for a support person of a person with a disability.

8. Provide notice when facilities or services that people with disabilities rely on to access or use City goods or services are temporarily disrupted.

9. Train staff, volunteers, contractors, and any other people who interact with the public or other third parties on the City's behalf on a number of topics as outlined in the customer service standard.

10. Train staff, volunteers, contractors and any other people who are involved in developing City policies, practices and procedures on the provision of goods or services on a number of topics as outlined in the customer service standard.

11. Establish a process for people to provide feedback on how the City provides goods or services to people with disabilities and how the City will respond to any feedback and take action on any complaints. It will make the information about its feedback process readily available to the public.

12. Prepare one or more documents describing its policies, practices, and procedures and, upon request, shall give a copy of a document to any person.

Region of Sudbury

Interoffice Correspondence

H:RMANBC...\\WPDATA\

February 20, 1998

MEMO TO: Building Inspection Staff
Building Permit Services Clerks

FROM: Guido Mazza, P.Eng.
Chief Building Official

SUBJECT: **Procedure Documentation**
Refreshment Vehicles/Chip Stands

Attached is a copy of modified procedures concerning the installation of refreshment vehicles/chip stands.

These procedures should serve to alleviate any confusion you may have had in the past as to when a building permit is required for this type of structure.

Should you have any concerns regarding these procedures, feel free to consult with me.

Guido Mazza, P.Eng.
Chief Building Official

Attach.

c.c. M. Tedeschi (FYI)

REGIONAL MUNICIPALITY OF SUDBURY
BUILDING SERVICES SECTION
PROCEDURE DOCUMENTATION

EFFECTIVE DATE: April 1, 1987	**NO. OF PAGES:** 2
REVISION DATE: February 19, 1998	**DEPARTMENT:** Planning and Development
PURSUANT TO POLICY: Directive from Director of Building Controls	**SECTION:** Building Services
	GROUP: Inspectors/Permit Control Group
	POSITION: Inspectors/Permit Control Clerks

APPROVAL OF REFRESHMENT VEHICLES/CHIP STANDS

When refreshment vehicle operators come in to apply for approval for their units it is important that they be provided with the most current and up-to-date information affecting their facility.

The following items are to be considered before authorizing the establishment of a refreshment vehicle:

A proposal should be supported by sufficient information to enable an inspector the opportunity to assess whether or not the refreshment vehicle complies with the zoning regulations. A drawing, showing the location of the refreshment vehicle and the surrounding buildings on the lot should be accurately described on a plot plan.

2. The use must satisfy the applicable zoning regulations.

3. The refreshment vehicles must not occupy parking spaces required by the buildings already on site.

4. Sufficient parking spaces must be provided to satisfy the zoning regulations determined by the size of the refreshment vehicle.

5. It must be established if a Site Plan Agreement currently affects the property and the refreshment vehicle is provided for in the agreement.

... 2/.

HISTORY:

These procedures were put in plac by the Director of Building Contro in an inter-office memo to sta dated April 1, 1987. On Decembe 30, 1991 these procedures wer confirmed in another inter-offic memo from the Director of Building Controls to Building Inspectors, the By-law Section and the Site Plar Control Section.

CROSS REFERENCES: - Inter-office memo dated December 30, 1991, including an inter-office memo dated April 1, 1987 from the Director of Building Controls to Building Inspectors, By-law Section and Site Plan Control Section.

DEPARTMENT HEAD	SECTION HEAD	PREPARED BY:
V.E. Lautenbach	G.A. Mazza, P.Eng.	I.S.Clarke, CPS, AMCT

6. The signs erected to advertise the refreshment vehicle activities and/or its menu, must satisfy the applicable zoning regulations.

7. The vehicle must be set back from the property lines to satisfy the current zoning regulations. February 19, 1998

8. All seating facilities connected with the refreshment vehicle must be shown on the drawing submitted.

9. The operator is to advise whether or not the refreshment vehicle is to be located at a single site or moved from place to place.

A Building Permit is only required if:

- structure or refreshment vehicle is directly connected to "hard services" such as sewer/water & hydro.

  Note that refreshment vehicles/chip stands obtaining power via an extension cord plug-in are not considered connected to a "hard service". If hydro is supplied through a "mast" connected to the vehicle or structure, it is to be considered "hard" connected. The vehicle or structure, if connected to "hard servicse", must be underpinned with cribbing and anchored to resist overturning. Details for such work can be provided from those in CSA Standard 240.10.1-94. Site Preparation, Foundation and Anchorage of Mobile Homes, Figure C-4 Typical Anchorage Systems and Figure B8 - Wood Crib Pier Foundation, copies attached.

- structure or refreshment vehicle is not on wheels and requires cribbing and anchoring

Any questions with respect to this procedure should be directed to the Chief Building Official.

FEES:

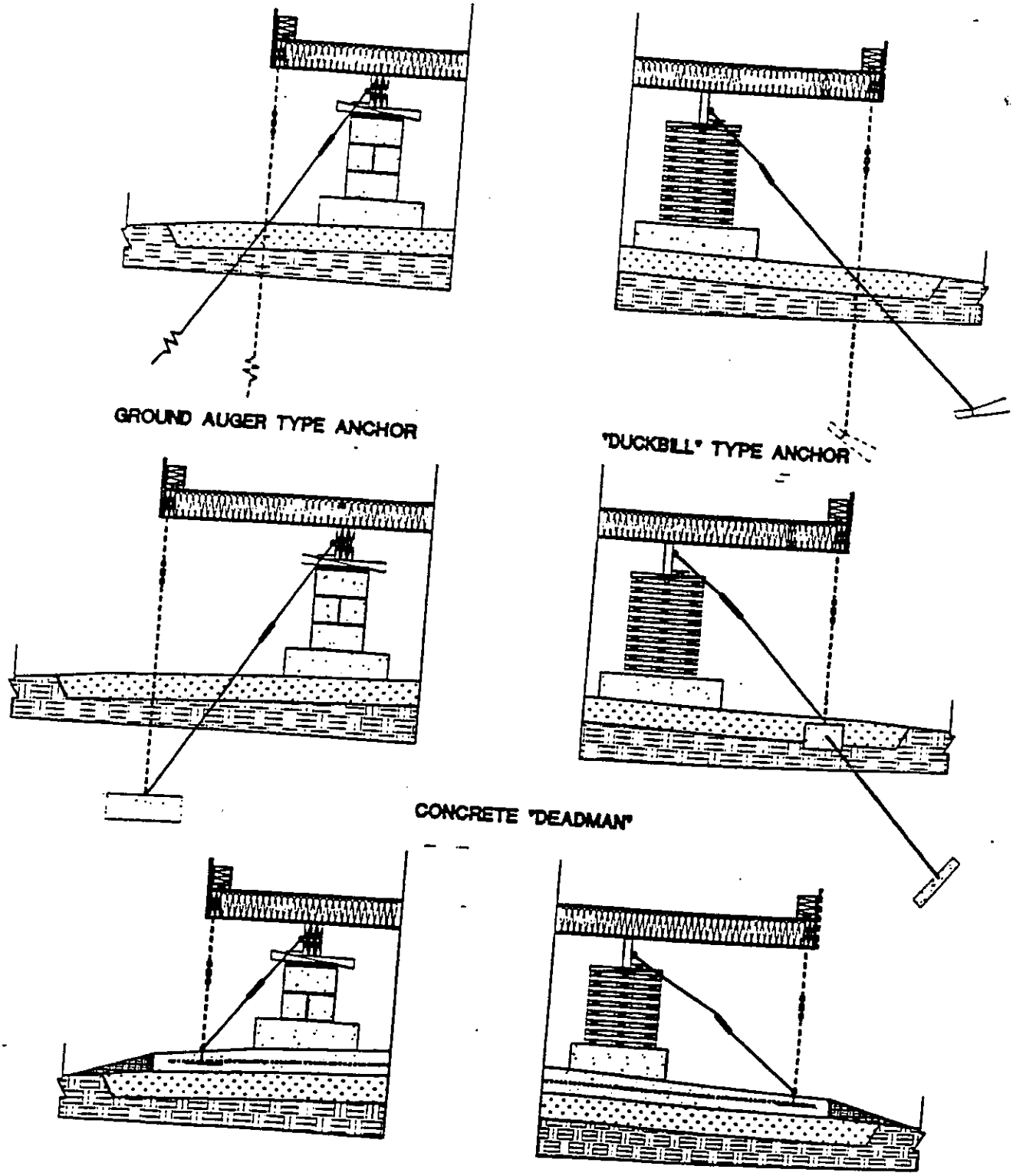

Notes:

(1) *Diagonal tiedowns are effective in limiting lateral sliding on the foundation piers.*

(2) *Vertical tiedowns, directly connected to the wall studs, provide the most effective resistance to uplift and overturning forces and should be considered for use at high wind load sites, particularly on the prevailing windward sides of the installation.*

Figure C4
Typical Anchorage Systems
(See Clause 5.)

34

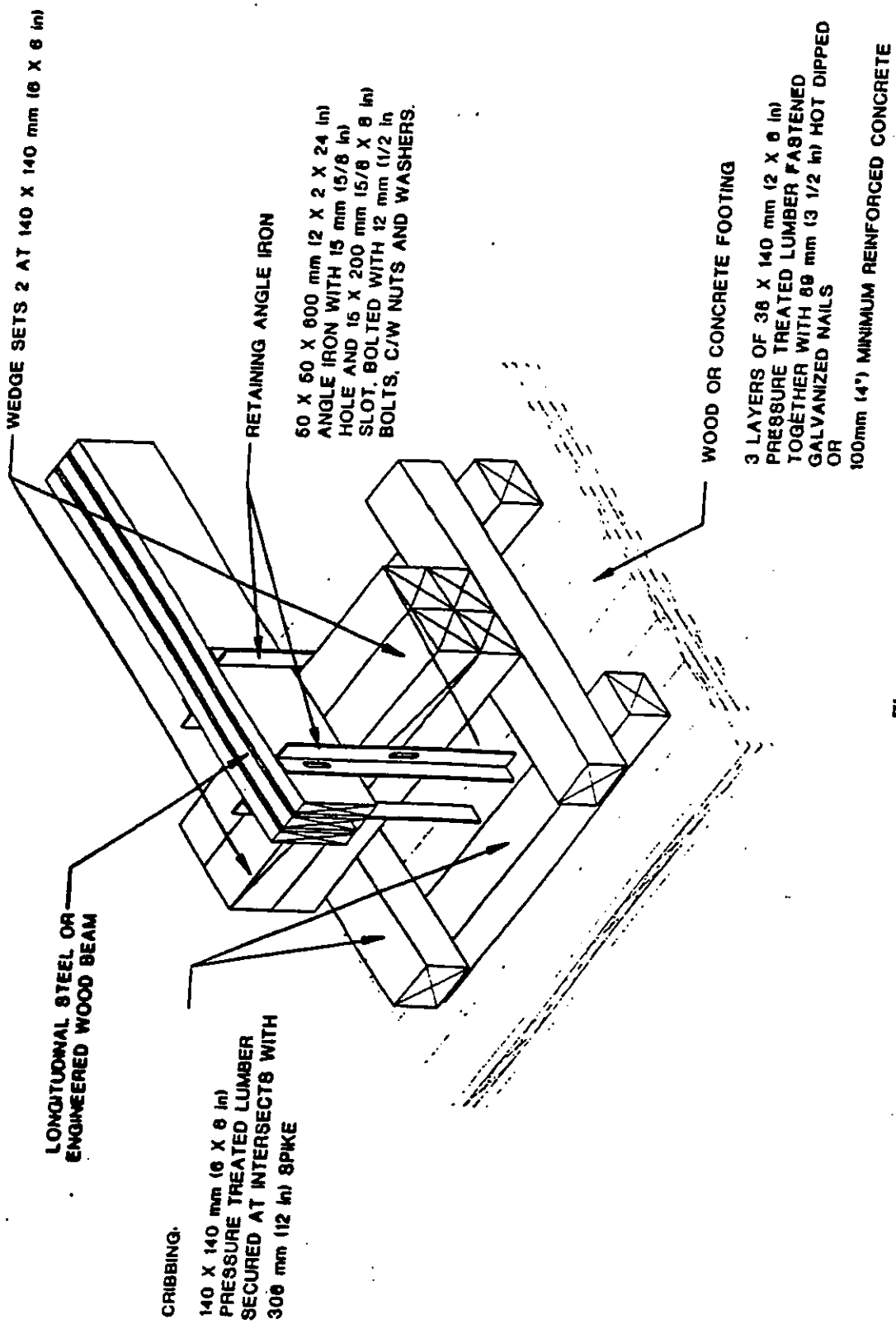

Figure B8
Wood Crib Pier Foundation

Sudbury Greater Grand

Interoffice Correspondence

February 2, 2005

TO: **Plans Examiners**
Rhéal Pitre
Gisele Martin

FROM: **G. A. Mazza**

RE: **Lot Grading Policy**

Attached is the Lot Grading Policy passed by Council effective January 27, 2005. The administrative details of the implementation of this policy are currently being worked out with Public Works and will be forwarded to you as soon as they are available.

Please familiarize yourselves with the grading policy attached.

GUIDO A. MAZZA, P. ENG.
CHIEF BUILDING OFFICIAL
CITY OF GREATER SUDBURY

GAM/vk

Attachment

cc: G. Clausen

G. Mazza
R. Morton
G. Clausen
A. Stephen
Jeff Pomeroy
R. Swiddle(2)

BY-LAW 2005-26

A BY-LAW OF THE CITY OF GREATER SUDBURY TO ESTABLISH A LOT GRADING POLICY

WHEREAS the Council of the City of Greater Sudbury wishes to establish a Lot Grading Policy;

NOW THEREFORE THE COUNCIL OF THE CITY OF GREATER SUDBURY HEREBY ENACTS AS FOLLOWS:

1. The Lot Grading Policy attached hereto as Schedule "A" and forming part of this By-law is hereby adopted.

2. This By-law shall come into force and take effect immediately upon the final passing of same.

READ A FIRST AND SECOND TIME IN OPEN COUNCIL this 27th day of January, 2005.

Mayor

Clerk

READ A THIRD TIME AND FINALLY ENACTED AND PASSED IN OPEN COUNCIL this 27th day of January, 2005.

Mayor

Clerk

SCHEDULE "A"
TO BY-LAW 2005-26
OF THE CITY OF GREATER SUDBURY

Lot Grading Policy

SCHEDULE "A"
TO BY-LAW 2005-26
OF THE CITY OF GREATER SUDBURY

Table of Contents

Appendices

SCHEDULE "A"
TO BY-LAW 2005-26
OF THE CITY OF GREATER SUDBURY

LOT GRADING POLICY

1.0 Introduction

The issue of lot grading is one of the most important and contentious matters that Councillors, staff, homeowners, builders and developers have to deal with in this community.

The Municipal Engineers Association and Consulting Engineers of Ontario defines a Lot Grading Plan "as an overall grading plan for an individual lot, or subdivision, prepared for the purpose of controlling the overall surface drainage pattern through the establishment of relative surface elevations in accordance with good drainage practice."

Lack of positive lot grading may result in drainage problems for either single or multiple properties. The problems lead to neighbourhood complaints and conflicts.

The drainage problems may lead to damages due to flooding, ponding, seepage into basements, stagnate water with associated odour and perhaps resulting in vermin and insect nuisance and potential health hazards, loss of enjoyment / use of property, etc., insurance claims and threatened law suits between abutting property owners, including the municipality, are common.

The affected property owners become frustrated with the home builder, developer and municipality for failure to carry-out proper design, construction control and / or enforcement.

Upon investigation, the causes of the lot grading / drainage problems can generally be categorized into three types:

1. Lack of a Proper Lot Grading Plan and functional drainage outlet.

2. Failure to construct / comply with Lot Grading Plan.

3. Downstream obstructions by others.

The problems generally come to light in the spring during spring snow melt and run-off, or during times of heavy sustained rainfall.

Often drainage problems come to light within the first year, often after the homeowner has completed landscaping, constructed fences, sheds, etc.

At this time, necessary repairs to provide proper drainage are generally expensive and often limited by physical restriction. Often abutting property owners are also impacted when developing proper drainage outlets.

With proper guidelines for the design, field control and certification of lot grading as well as on-going municipal monitoring and control procedures both during and subsequent to development, lot grading and drainage problems can be significantly reduced and the need for expensive repairs eliminated. Proper lot grading also maximizes the usable area in the rear yard for the homeowner.

SCHEDULE "A"
TO BY-LAW 2005-26
OF THE CITY OF GREATER SUDBURY

1.1 Policy

As a general statement, the City will require that all new lots created by either severance or subdivision have a Lot Grading Plan registered on-title. The property owner will be required to maintain the integrity of lot drainage as shown on the registered Lot Grading Plan.

The policy provides the general requirements for lot grading for new lots created by way of either the subdivision or severance process.

The policy also deals with the general requirements for an As-built Lot Grading Plan with Certification for all lots as a condition of obtaining a building permit for a new home.

Attached at the rear of this Policy document are the Appendices.

Appendix I	Lot Grading Design Guidelines
Appendix II	Requirements for Lot Grading Professionals and Sample Documentation

2.0 Creation of Lots

2.1 Lots Created by way of the Subdivision Process

The developer currently provides a General Subdivision Lot Grading Plan as part of the requirements to register a new subdivision. Typical Lot Grading Plans are described in the *"Lot Grading Design Guidelines"* contained in *"Appendix I"* attached.

As a condition of final acceptance of the subdivision, the developer will be required to construct all rear yard swales including slope cover and outlet systems as necessary. Also, the developer will provide an as-built drawing (drawing of record) showing all rear yard swales and outlet drainage systems as part of the final acceptance of the subdivision.

The developers' responsibility for lot grading will be complete when the General Subdivision Lot Grading Plan is registered and the As-built Rear Yard Swale Lot Grading System (Rear Yard Swale Lot Grading System Plan of Record) is / are accepted by the City.

2.1 Lots Created by way of the Subdivision Process - continued

Each building permit application will include a design Lot Grading Plan indicating that grading on the lot will be completed in general accordance with the design Lot Grading Plan for the subdivision and in general accordance with the Master As-Built Lot Grading Plan (plan of record). The Design Lot Grading Plan may be submitted in advance of the building permit application to facilitate an expeditious Technical Services' review of the design plan and building permit application.

The owner / applicant will also agree to provide an As-built Lot Grading Plan (plan of record) at the completion of the construction of the house and lot grading. The As-built Lot Grading Plan will be prepared and certified by a Lot Grading Professional registered with the City. The requirements for Lot Grading Professionals and related documentation are contained in *Appendix II.*

2.2 Lots Created by the Severance Process

The concerns / issues of proper lot grading are as important for lots created by the severance process as in lots created by way of the subdivision process. Often the lots that are created are infill situations within existing urban areas. These properties are often marginal and the last to be developed. Achieving positive drainage solutions are often difficult and may be expensive.

As a condition of approval of the severance, the City must be assured that positive drainage from the proposed new lots can be provided to a positive outlet and that there will be no negative impact on either adjacent or downstream properties.

If drainage easements are required, they must be obtained as part of the severance approval process. They cannot be deferred to the time of building permit application.

Therefore, as a general policy, a Lot Grading Plan will be required as part of each lot created by the severance application process. In unique situations / locations, a Lot Grading Plan may not be required as part of the severance application. In these situations, the applicant will have to demonstrate to the General Manager of Infrastructure & Emergency Services, or his designate, that a Lot Grading Plan is not required.

The specific information required for the Lot Grading Plan will be specific to each site. Therefore, it is recommended that the owner / applicant contact the Technical Services' Section to confirm the specific requirements on a site by site basis.

Typical requirements for this Lot Grading Plan and Certification for lots created by the severance process, are contained in the *"Lot Grading Design Guidelines"*, contained in *"Appendix I"* attached.

3.0 Building Permit Stage

3.1 Design Lot Grading Plan

As part of the application for a building permit for a new house, the owner / applicant must submit a Design Lot Grading Plan showing how positive drainage of surface water run-off from the lot will be provided and without adversely affecting adjacent properties.

If surface water run-off from the owner / applicant's lot must traverse private property before it reaches a positive downstream drainage outlet, written permission of the affected private property owner to receive the surface run-off water must be submitted with the application. The acceptance by the private property owner would have to be in perpetuity.

Also, as a condition of receiving the building permit, the owner / applicant must agree that after the house is built and the lot grading complete, to provide an As-built Lot Grading Plan prepared and Certified by a Lot Grading Professional registered with the City.

Typical requirements for the *"Site Design Lot Grading Plan"* for Building Permit Applications are contained in the Design Guidelines in *"Appendix I"* attached.

The requirements for Lot Grading Professionals are contained in *"Appendix II"* attached.

3.2 As-Built Lot Grading Plan and Certification

After the house is constructed and lot grading completed, the owner / applicant must submit an As-built Lot Grading Plan and Certification prepared by a Lot Grading Professional, certifying that grading on the lot is in general conformance with the registered Lot Grading Plan if available and As-built Lot Grading Plan (Lot Grading Plan of Record). If during construction and lot grading the owner / applicant is required to deviate from the design plan and / or registered Lot Grading Plan (if available), the Lot Grading Professional must provide documentation and certification that surface water run-off will be discharged to a positive drainage system and that adjacent or downstream properties will not be impacted. If water run-off is required to traverse adjacent or downstream properties, the owner / applicant must provide written acceptance of the affected

3.2 As-Built Lot Grading Plan and Certification - continued

Should the owner not complete the lot grading or submit the required Lot Grading Plan and Certification within nine months of occupancy, the City will put a notice on the building permit file and advise the owner accordingly. Similarly, the Building Permit file will not be closed until the As-built Lot Grading Plan and Certification are received and accepted by the City.

The General Manager of Infrastructure & Emergency Services may give a time extension to complete the lot grading if in his or her opinion the request is valid.

All lot grading matters / concerns that may arise will be the responsibility of the property owner. It will be the responsibility of the property owner to work with their Lot Grading Professional to resolve any lot grading concerns / issues that may arise. The City may facilitate a resolution on behalf of either adjacent or downstream affected property owners.

4.0 Lot Grading for Rural Lot Building Permits

Design and As-built Site Lot Grading Plans will not be required for rural lots greater than 0.4 hectares and with road frontages greater than 50 metres.

5.0 Lot Grading Professionals

The requirements for *"Lot Grading Professionals"* are contained in *"Appendix II"* attached.

The Technical Services' Section of the Public Works Department's Engineering Division will maintain a list of approved Lot Grading Professionals. This list will be available to the public.

6.0 A Guide for Residential Lot Grading

Knowledge about lot grading is essential to the success and implementation of the Lot Grading Policy.

The *"Guide for Residential Lot Grading"* will be available at both the City's Technical Services' Section and Building Services' Division, Sudbury and District Home Builders' Association, as well as with local professional civil engineers, architects, surveyors, landscape architects, developers and home building contractors.

The Engineering Division's Technical Services' Staff will provide technical assistance to all owner / applicants applying for a building permit to thoroughly explain the lot grading requirements.

Appendix I

Lot Grading Design Guidelines

LOT GRADING DESIGN GUIDELINES

1.0 Introduction

These Design Guidelines are to provide general guidance and to assist in the preparation of the rear yard swale, Lot Grading Plans of Subdivision, As-built Lot Grading Plans, Severance Plans and individual Lot Grading Plans.

These Guidelines are to complement existing design standards and planning documents and / or best practices.

These design guidelines will generally be applicable for the majority of locations within the City. However, because of the unique topography in certain areas, design parameters different from the guidelines will be considered by the City.

All submissions received by Technical Services will be reviewed taking these factors into consideration.

2.0 General

a) Lot grading and resulting drainage patterns shall not adversely affect either adjacent or downstream lands.

b) Lot grading is to be implemented to facilitate ease of maintenance and maximize use of the land.

c) All existing perimeter ground elevations of the subject property shall remain undisturbed unless approved otherwise.

d) All existing surface water run-off / drainage run-off entering the subject property from adjacent lands shall be accommodated by the grading and drainage plan submitted for approval.

e) Lot drainage shall be contained within the subject property and discharged into an existing municipal rear yard swale or storm sewer drainage system or directly into a natural watercourse in a manner acceptable to the City of Greater Sudbury.

f) No alterations to existing boundary elevations of adjacent lands shall be undertaken unless written agreement with the adjacent property owner has been obtained and submitted in a format acceptable to the City of Greater Sudbury.

g) If at the design plan stage, i.e. application for a building permit, it is known that surface water run-off from the owner / applicant's lot must flow across either adjacent and / or downstream properties, the owner / applicant must submit written confirmation of agreement to accept the surface water flow in perpetuity from the affected property owner. The submissions must be received with the design plan.

2.0 General - continued

h) Similarly, if during construction, alterations to the design plan have to be made to drain water across either adjacent and / or downstream properties, letters of acceptance from the affected property owners must be received with the final As-built Lot Grading Plan.

3.0 Recommended Lot Grading Design Criteria

3.1 General

- Minimum front and rear lot gradient is two (2) percent.
- Maximum front and rear lot gradient is seven (7) percent.
- Maximum rear or side yard swale slope shall be three (3) parts horizontal to one (1) part vertical (3h:1v slope).
- Minimum side yard gradient is five (5) percent.
- Maximum side yard gradient is 33 percent (3h:1v side slope).
- Minimum height of top of foundation wall above finished grade is 200 mm. (Mandatory as per Ontario Building Code.)

3.2 Driveways

- The minimum gradient is two (2) percent.
- The gradient on any driveway is four (4) percent.
- The maximum gradient is ten (10) percent.
- It is desirable to install any hydrant, light standard or utility box at least one (1) metre away from the driveway.
- The gradient of the driveway shall be calculated from the back of curb or edge of pavement to the front of the garage or level portion of the driveway. The future provision of a sidewalk on the City road frontage must be taken into consideration

3.3 Rear Lot Swales

- Rear yard swales with gradient between 0.3 to 0.99 percent grade will be approved with a 150 mm geotextile wrapped perforated subdrain.
- Rear yard swales without subdrains shall have a minimum gradient of one percent.
- All subdrains must discharge to a positive outlet.
- Rear and side yard swale depths shall conform to the following requirements:
  - Minimum depth = 150 mm
  - Maximum rear yard depth = 500 mm
  - Maximum seeded or sodded side slope is 3 horizontal to1 vertical (3h:1v)
- All rear yard slopes shall be provided with vegetative cover consisting of either;
  - number one (1) nursery sod and at least 75 mm of topsoil, or
  - hydroseeding and at least 75 mm of topsoil, or
  - alternative vegetative cover as approved by the City.
- Rear yard swales shall have a maximum length of 150m.
- All rear yard swales may be placed on one side of the property line or split over property lines.
- All rear yard swales will be located on easements to be provided to the City.
- As-built rear yard swales are to be shown on the final As-built Subdivision Lot Grading Plan.
- All rear yard swales will connect to a positive drainage outlet such as a creek, stream or natural drainage outlet. Alternatively, the rear yard swale may discharge into a storm sewer system complete with rear yard catchbasin(s) and enhanced storm sewer systems. All rear yard catchbasin(s) and storm sewer systems may be located either entirely on one property or split between adjoining properties. A minimum 3m wide easement centered over the catchbasin(s) and / or storm sewer system must be provided to the City.

3.4 Rear Yard Swale Easements

- Easements for rear yard swales and related rear yard catchbasins and storm sewer systems, shall have a minimum width of three (3) metres and be centered over the as-built swale.
- All easements must be sufficiently wide to accommodate / permit necessary maintenance or future upkeep / repairs of the swale and / or infrastructure system.

3.5 Side Yard Drainage Swales

- As a general rule, side yard drainage swales will be centered on the property line of adjoining properties.
- Minimum depth of swale is 150 mm.
- Maximum depth of swale is 300 mm.
- Gradient of swale will generally be in conformance with lot grading on the lot, ie. front to back, or split yard.
- On Split Yard Drainage Plans, the side yard drainage swale will generally end at the front of the building closest to street. This will facilitate the run-off to drain onto the front lawns and be absorbed.
- On exceptional cases, the swale will be permitted to extend to near the front property line and discharge into a front yard catchbasin or catchbasin inlet lead.
- Under no circumstances will side yard drainage be permitted to drain directly onto any driveway and / or onto City property, including sidewalk, boulevard and / or roadway.
- Easements are not required on side yard swales.

3.6 General Subdivision Lot Grading Plan

- General Subdivision Lot Grading Plans shall be developed in accordance with this Design Guidelines and / or other standards / designs acceptable to the City.
- Centreline road elevations are to be shown every 15 metres on all Subdivision Lot Grading Plans.
- On individual Lot Grading Plans, the geodetic elevation of top of curb extended from the property line(s) may be used as a benchmark.
- A minimum of one on site geodetic bench mark shall be noted on the plan.

3.7 Severance Lot Grading Plan

3.8 Building Permit Lot Grading Plan

- Lot Grading Plans for building permit applications shall be developed in accordance with these Design Guidelines and /or other Design Standards acceptable to the City.

4.0 Unique Circumstances

- It is anticipated that lot grading will be able to be completed using the guidelines contained herein for the majority of lots within the City. However, unique situations / locations are anticipated due to the unique topography of the City.

- The General Manager of Infrastructure & Emergency Services, or his or her designate, will give consideration to proposed alternative designs / deviations from these guidelines that are prepared and submitted by design professionals using acceptable design criteria and ensuring that acceptable lot grading can be achieved.

Design Guideline Drawings Examples

Drawing No.	Title
New Subdivision	
LG-101	General Subdivision Grading and Drainage Plan Detail Requirements for Split Drainage
LG-102	General Subdivision Grading and Drainage Plan Detail Requirements for Back to Front Drainage
LG-103	General Subdivision Grading and Drainage Plan Detail Requirements for Rear Yard Catchbasin
LG-104	General Subdivision Grading and Drainage Plan Example Lot Grading Plan
Severance Applications	
LG-201	Severance Application Typical Lot Grading Plan Requirements Split Drainage
LG-202	Severance Application Typical Lot Grading Plan Requirements Back to Front Drainage
LG-203	Severance Application Typical Lot Grading Plan Requirements No Rear Yard Outlet
Building Permits - Urban Section	
LG-301	Building Permit Typical Lot Grading Plan Requirements Split Drainage, Urban Section
LG-302	Building Permit Typical Lot Grading Plan Requirements Back to Front Drainage, Urban Section
Building Permits - Rural Section	
LG-401	Building Permit Typical Lot Grading Plan Requirements Split Drainage, Rural Conditions

Appendix II

Requirements for Lot Grading Professionals and Sample Documentation

Requirements and Responsibilities of Lot Grading Professionals (L.G.P.'s)

1.0 Introduction

It is the intent of the City to have all final As-built Lot Grading Plans for new house construction carried-out by a Lot Grading Professional (L.G.P.). The L.G.P. will be responsible for the preparation of all as-built drawings and related certification.

A L.G.P. will be required to prepare a Lot Grading Plan for every lot severance application unless approved otherwise.

The L.G.P. will have to certify at the as-built stage that positive drainage has been provided for the lot and that there will be no negative impact / adverse affect on either adjacent or downstream properties. If overland flow is required to traverse either adjacent or downstream property owners, the owner / applicant and / or L.G.P. will have to provide acceptance letters from the impacted property owners as part of the final certification package.

2.0 Qualifications

A L.G.P. may be either a professional civil engineer, architect, land surveyor or landscape architect and / or company providing these services, experienced in lot grading design. The L.G.P. must have a valid Certificate of Authorization to practice in their profession and valid professional liability, i.e., errors and omissions insurance. Other individuals / companies meeting the above criteria / conditions will also be eligible to be a Lot Grading Professional.

With the implementation of this Lot Grading Policy, the City will refer all lot grading problems / concerns / issues that arise subsequent to the acceptance of the As-built Lot Grading Plan and Certification to the property owner to resolve and rectify. It is anticipated that the property owner will work with the L.G.P. of record to resolve any problems / concerns / issues.

In future, the City's function in the resolution of lot grading problems will be one of facilitation of the concerned parties.

The Technical Services' Section will maintain a list of approved L.G.P.'s. To either get on the list or to remain on the list of approved L.G.P.'s, it will be the L.G.P.'s responsibility to ensure that the City's has current valid copies of their certificates of authorization to practice in their profession and valid professional liability, ie., errors and omissions insurance. Any L.G.P.'s records / information that become out-of-date /

2.0 Qualifications - continued

The City will provide the approved list to those who request a list of approved L.G.P.'s. The City will not prepare a short list or recommended list of preferred / recommended L.G.P.'s.

All professionals requesting to be approved by the City must submit a current résumé (business profile) describing their experience in lot grading including copies of previous Lot Grading Plans / Certification, if available. Also, copies of their valid Certification of Authorization (or equivalent) and proof of Professional Liability Insurance must be provided.

L.G.P.'s must maintain good standing with regards to the quality of their work to the satisfaction of the General Manager of Infrastructure & Emergency Services.

SAMPLE

On Company Letterhead

Date

City of Greater Sudbury
200 Brady Street
P.O. Box 5000, Stn. A
Sudbury ON P3A 5P3

ATTENTION: General Manager of Infrastructure & Emergency Services

Re: Lot ____, Plan _____,
Street Address _____

Re: As-Built Lot Grading Plan and Certification:

"I hereby certify that I have performed the necessary field survey and have determined the as-built grades shown on the attached As-built Lot Grading Plan No. _____, Dated _____.

I further certify that the lot grading as shown on the plan, will provide positive drainage of this property and will be taken to a positive natural drainage course or storm sewer system and will not have any adverse affect on either adjacent and / or downstream property owners.

Any letters of permission from adjacent or downstream property owners affected by the lot grading on this property are included herein."

_____
Signature

SAMPLE

Schedule B

City of Greater Sudbury
Ville du Grand Sudbury

Date

BOX 5000 STN A
BRADY STREET
DBURY ON P3A 5P3

5000 SUCC A
RUE BRADY
DBURY, ON P3A 5P3

5.671..2489

To Owner / Applicant

Re: Lot Grading
Notice of Non-Compliance

The City of Greater Sudbury serves notice to the owner(s) of Lot _____ Plan _ _____, that the lot grading requirements of the City of Greater Sudbury, have not been met for this lot as of _____.
Date

Condition of the Building Permit Application No. _____, dated _____, stated that No.____ Final Lot Grading Plan and Certification Package was to be submitted to the City within nine (9) months of occupancy of the house.

Said non-compliance may indicate that lot grading or drainage problems exist which affect this lot or adjacent lots.

This notice of non-compliance will remain on the building permit file until notice of compliance is received and accepted by the City.

Your prompt attention to this matter would be appreciated.

November 10th, 2004

new permit

Interoffice Correspondence

May 3, 2005

TO: **Building Inspectors** **Plans Examiners**
Permit Services Clerks **Rheal Pitre**
Gisele Martin

FROM: **G. A. Mazza**

RE: **Lot Grading Policy By-law #2005-26**

Effective immediately, all residential single family dwellings in recently cleared subdivision with site grading plans registered on title will require conformance to our new Lot Grading Policy by-law #2005-26 (see Appendix 'A' attached).

At application stage, applicants for new single family dwellings will be required to submit grading plans which conform to the grading plans noted on the M-Plan of Subdivision. As a minimum, the submission for building shall include:

1. A copy of the M-Plan grading plan (see Appendix 'B' for example) for the lot or a scaled drawing which conforms to that registered site grading plan.

2. The owner/applicant shall also sign an Owner's Undertaking (see Appendix 'C') that acknowledges that the lot grading policy (By-law 2005-26) applies to his Building Permit and that he/she will retain the services of a designated Lot Grading Professional, recognized by our Public Works Department, and name that firm.

3. The owner/applicant will also have to provide a commitment Certificate (see Appendix 'D') signed by his designated Lot Grading Professional which confirms he has been hired to review the construction and lot grading as per the Lot Grading Policy, which includes producing an as-built geodetic and foot print survey of the residential construction, for review by the City within 9 months of occupancy of the building.

...2

These three submissions form the minimum requirements for Building Permit application. The Plans Examiner or Customer Service Representative/Plans Examiner must ensure these documents are in place prior to issuing a Building Permit. Further, the designated Lot Grading Professional will be checked against an approved list provided by Public Works (see Appendix 'E'). If the designated Lot Grading Professional submitted by the owner is not on our list, the Plans Examiner or Customer Service Representative/Plans Examiner will check with the Manager of Technical Services to obtain approval of the use of the consultant. The submission will continue to be circulated to Public Works for comments regardless.

GUIDO A. MAZZA, P. ENG.
CHIEF BUILDING OFFICIAL
CITY OF GREATER SUDBURY

GAM/vk

Attachments

Sudbury Greater Grand

Interoffice Correspondence

October 10, 2006

TO: **BUILDING INSPECTORS**
PLANS EXAMINERS

FROM: **A. MAZZUCHIN**

RE: **Lot Grading Policy**

This memo is to clarify Section 3.2 of the City of Greater Sudbury's Lot Grading Policy.

> *".... the Building permit file will not be closed until the As-built Lot Grading Plan and Certification are received and accepted by the City....".*

The "City" in this case means the General Manager of Infrastructure & Emergency Services. At this particular time this is handled by Robert Webb, Supervisor of Development Engineering.

A Mazz

ALFIO MAZZUCHIN
ACTING MANAGER OF CODE COMPLIANCE/
DEPUTY CHIEF BUILDING OFFICIAL

AM/vk

cc: R. Beaudry
G. Mazza

3.2 As-Built Lot Grading Plan and Certification - continued

Should the owner not complete the lot grading or submit the required Lot Grading Plan and Certification within nine months of occupancy, the City will put a notice on the building permit file and advise the owner accordingly. Similarly, the Building Permit file will not be closed until the As-built Lot Grading Plan and Certification are received and accepted by the City.

The General Manager of Infrastructure & Emergency Services may give a time extension to complete the lot grading if in his or her opinion the request is valid.

All lot grading matters / concerns that may arise will be the responsibility of the property owner. It will be the responsibility of the property owner to work with their Lot Grading Professional to resolve any lot grading concerns / issues that may arise. The City may facilitate a resolution on behalf of either adjacent or downstream affected property owners.

4.0 Lot Grading for Rural Lot Building Permits

Design and As-built Site Lot Grading Plans will not be required for rural lots greater than 0.4 hectares and with road frontages greater than 50 metres.

5.0 Lot Grading Professionals

The requirements for *"Lot Grading Professionals"* are contained in *"Appendix II"* attached.

The Technical Services' Section of the Public Works Department's Engineering Division will maintain a list of approved Lot Grading Professionals. This list will be available to the public.

6.0 A Guide for Residential Lot Grading

From: Richard Beaudry
To: Building Services Office
Date: Tue, Aug 14, 2007 4:57 PM
Subject: Detached Garages

To all staff,

We must have a commitment certificate and a letter of general conformance for all detached garage slabs which exceed 538 sq. ft.

Please ensure that applicant is aware of this at the application stage , verfied and entered into the system by the permit clerks and wriitten on the plans by the examiners. Inspectors must receive the above for finals.

Richard.

CC: Guido Mazza

Oct 11,2006

To whom It May Concern

Interpretation arrived at by CSR/PE ,PE and CBO re: attached buildings

If two buildings are attached via a heated space then that would be considered one building.

If for example a dwelling and a gagage share a common roof only , that would be two buildings

If a dwelling and a garage share a common roof and a heated enclosed walk way that would be considered one building.

A. Mazzuchin

Greater | Grand Sudbury
www.greatersudbury.ca

INTEROFFICE MEMO

May 7, 2008

TO: Plans Examiners & Building Inspectors

FROM: Alfio Mazzuchin

RE: Details for Plans Review

It has been brought to my attention that we may be missing the attached details both at plans review and field inspections.

Please add the attached to your procedure manuals.

ALFIO MAZZUCHIN
ACTING MANAGER OF CODE COMPLIANCE/
DEPUTY CHIEF BUILDING OFFICIAL

AM/vk

Attachment

The following illustration describes conditions specified in Sentences (3) and (4) where openings in walls cause portions of foundation walls to be considered laterally unsupported.

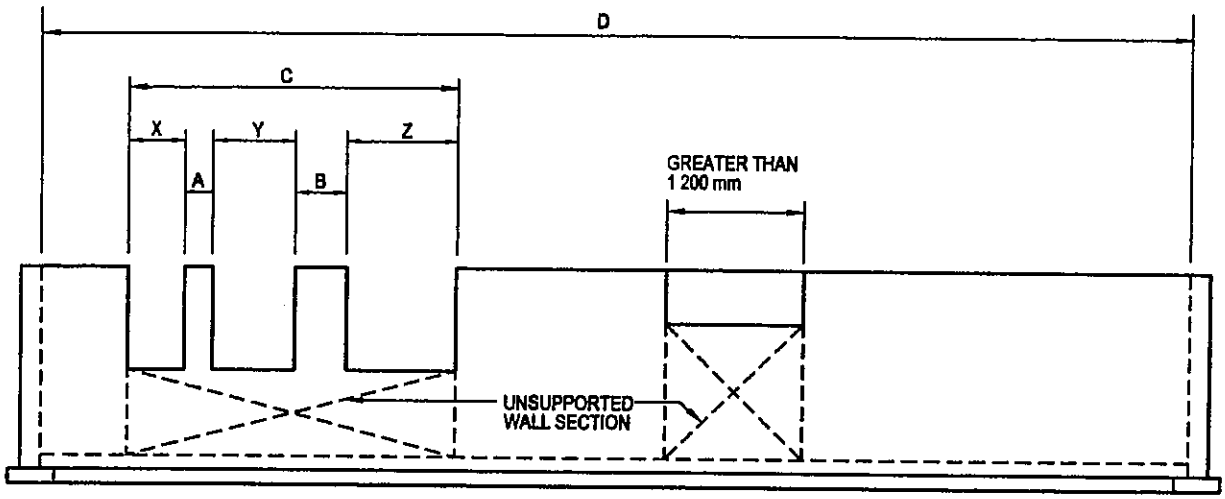

FOUNDATION WALL ELEVATION

IF 'A' IS LESS THAN $\frac{X+Y}{2}$ THEN OPENING = X + A + Y

IF 'B' IS LESS THAN $\frac{X+Z}{2}$ THEN OPENING = X + A + Y + B + Z

IF 'C' IS MORE THAN 25% OF 'D' OR 1 200 mm THEN WALL BELOW IS CONSIDERED UNSUPPORTED

9.15.4.4. REDUCTION IN THICKNESS

The top of foundation walls may be reduced in thickness to permit installation of floor joists and masonry exterior facing, subject to the requirements of this article.

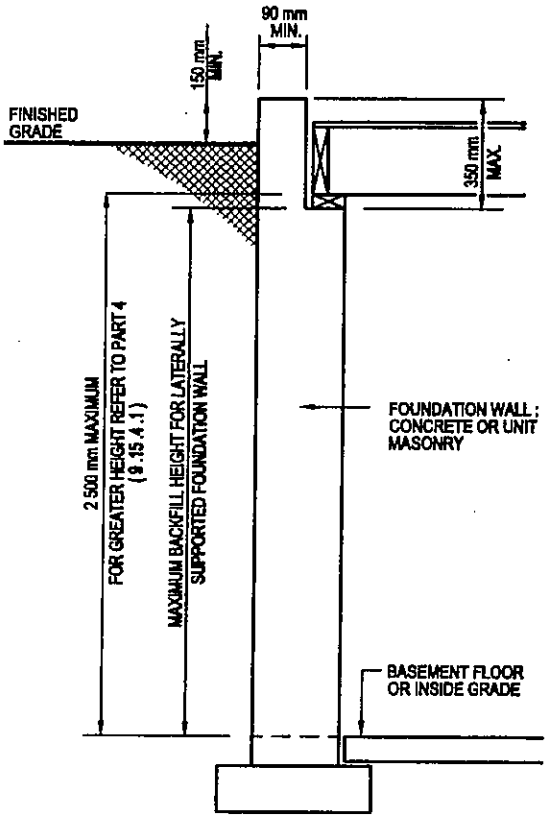

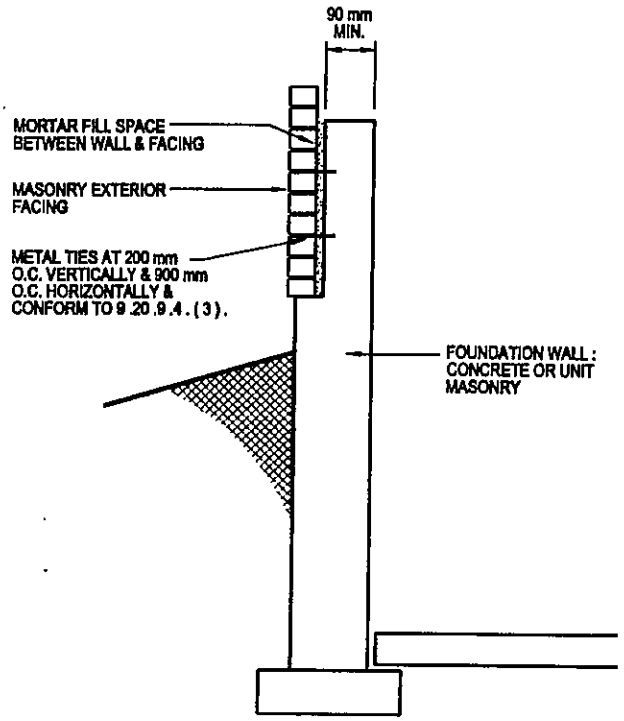

Interoffice Correspondence

March 2, 1994

TO: **G. MARTIN**
G. MAZZA

FROM: **B. A. FRANSEN**

SUBJECT: **SUBMISSION OF PLANS FOR BUILDING PERMIT**

I have had an opportunity to review a number of plans and documents that were submitted for the purpose of obtaining Building Permits over the past few days. Quite frankly, I am somewhat concerned that the data we accept is in such poor form as to be almost meaningless.

Would you arrange to ensure that the Plans Examiners are alerted to the need for legible plans. They are to discontinue immediately the practice of having copies made of old plans that were examined prior to the date of the most recent by-law amendments.

I must mention that some of the site plans were so poorly prepared and, worse still, accepted, that it was impossible to tell what property was being referenced.

Review with the Plans Examiners and the Inspectors the need to date stamp all drawings when they arrive and have placed on each drawing the permit number and address of the project.

....cont'd

Have a stamp made up for each Inspector, Permit Control Clerk and Plans Examiner that reads as follows:

Regional Municipality of Sudbury
Building Controls Division
Plans Examiner's/Inspector's
Comments:
Plans Reviewed to Support
Application No.:
Location: _____
No. Street
_____
Municipality Parcel
_____
Township Lot Concession

As you are aware, these concerns are for the period "Pre Mazza" and "Pre Martin", and I am certain that you will see that improvements are made.

B. A. FRANSEN, P. ENG.,
DIRECTOR OF BUILDING CONTROLS.
BAF*kcs

cc: Plan Examiners
Inspectors
Permit Control Clerks
D. Kyrzakos
J. Wilkin

Greater Grand Sudbury
www.greatersudbury.ca

INTEROFFICE MEMO

May 7, 2008

TO: BUILDING SERVICES STAFF

FROM: G. A. MAZZA

RE: Manitoulin West Recorder Article
Car Wash – No Permit

Attached is a copy of a newspaper article forwarded to me that you may find interesting if not amusing.

G. A. MAZZA, P. ENG.
DIRECTOR OF BUILDING SERVICES/
CHIEF BUILDING OFFICIAL

GAM/vk

Attachment

Region of Sudbury

Interoffice Correspondence

[redacted]

December 30, 1991

TO: R. O'MALLEY
PLANS EXAMINERS

FROM: B. A. FRANSEN

SUBJECT: **PROCEDURES FOR PLANS EXAMINERS**

Please review the attached memo to determine if the procedure is working properly.

Please provide me with your comments.

B. A. Fransen.

B. A. FRANSEN, P.ENG.,
DIRECTOR, BUILDING CONTROLS
BAF/kcs

Attach.

P.D. → Jan. 22, 92.

July 17th, 1987.

TO: All Clerical Staff

FROM: B. A. Fransen

SUBJECT: New Procedure
Building Controls Division

A new procedure has been adopted by the Plans Examiners to speed up the process of reviewing plans and try to educate the contractors so that when plans are brought in they will be as correct as possible.

The Plans Examiners will contact the contractors to come into our office and fill out the second set of plans. The contractor will have two choices:

1. He may stay and fill out the plans here, or
2. He may take them with him.

PROCEDURE: The plans will be in their file in the application boxes next to Rheal Pitre's desk. They will be marked with a yellow sticker saying that the plans are ready to be picked up.

1. If the contractor wishes to do them immediately, he should be shown to one of the inspector's desks in the back and given a red marking pencil or pen.

2. If the contractor elects to take the plans out of the office, a note should be left in the file.

Once a contractor has completed the second set of plans, he is to see an inspector and the inspectors will look after it from there on.

If further information is required or problems arise, please contact me immediately.

Donna Noel de Tilly,
for
B. A. Fransen, P. Eng.,
Director of Building Controls,
BAF/dn

cc: R. O'Malley
Plans Examiners
Bldg. Inspectors

From: Valerie Klotz
To: Inspectors.All; Plans Examiners
Date: Fri, Nov 13, 2009 9:39 AM
Subject: Stop Work Orders & Liquor Licenses

Stop Work Orders (SWO)

In order to alleviate some confusion with respect to Stop Work Orders...yes, Guido is the only one that signs them. The inspector involved with the file/address should be drafting the SWO for Guido's signature. If you wish me to type in the information, that's fine, but I don't provide the information to be put on the SWO. If you are unsure about anything related to the Order, you should be directing your questions to the Acting Manager of Code Compliance/Deputy Chief Building Official.

Liquor Licenses Process

When someone comes in to request Building Services' approval/occupant load for a liquor license, I fill out a form that lists the name and address of the establishment and whether it's a new license, transfer, etc.. At that time, I ask them if there is a building permit connected to this request. If yes, the inspection fee is waived as it is covered under the building permit. They are only charged for the letter ($43). If there is no permit connected to the request, then they are charged for an inspection and the letter ($132). This amount increases annually. I indicate whether the Inspector should call before going out. I give the form to the girls to book the inspection. Any questions you have regarding the inspection should be directed to the Acting Manager of Code Compliance/Deputy Chief Building Official. This includes questions about Fire Services and/or architects. Once the form is filled in by the inspector, it goes to the Acting Manger of Code Compliance/Deputy Chief Building Official for review and an occupant load is determined. The form, with the occupant load, is returned to me and I type the letter and call the applicant so they can pick it up.

CC: Guido Mazza

Sherri

Greater | Grand Sudbury
www.greatersudbury.ca

INTEROFFICE MEMO

January 16, 2008

TO: BUILDING SERVICES STAFF

FROM: G. A. Mazza

RE: 2007 Banked Time

Due to the fact that we have new staff members, I wish to remind staff of the following policy with respect to Banked Time. As per Schedule "D" Section (5) of the Collective Bargaining Agreement:

> *"Any banked time not taken by March 1st will be paid out on a straight time basis (one (1) overtime hour worked – one point five (1.5) hours banked time) as per the rate of pay at the time of accrual."*

Please be sure to obtain your supervisor's approval when booking banked time off before the end of February.

Under special circumstances these hours may be carried over beyond the end of February, however you must obtain your supervisor's approval prior to doing so.

G. A. MAZZA, P. ENG.
DIRECTOR OF BUILDING SERVICES/
CHIEF BUILDING OFFICIAL

GAM/vk

cc: R. Beaudry
C. Caporale

Sudbury Greater|Grand

Interoffice Correspondence

June 7, 2007

TO: **BUILDING INSPECTORS**
PLANS EXAMINERS

FROM: **Richard Beaudry**

RE: **Final Inspection/Occupancy**

I would like to stress the importance of leaving a copy of final inspection/occupancy notices where appropriate on site for the owner/contractor so that they do not have to make a special trip to our office for a copy. Please ensure you follow this procedure.

Thank you.

per Amozzuck

RICHARD S. BEAUDRY
MANAGER OF CODE COMPLIANCE/
DEPUTY CHIEF BUILDING OFFICIAL

/vk

INSPECTION NOTICE

Building Services Section

The Regional Municipality of Sudbury
200 Brady Street, Sudbury
Phone: 673-2171 – Ext. 4278

APPLICANT PERMIT NO.

OWNER

LOCATION OF BUILDING

DESCRIPTION OF BUILDING

Pursuant to a *Date of Completion Notice*, an inspection of the building herein described was conducted and the items listed are to be corrected forthwith

1. There are ____ outstanding orders made by an inspector under Section 12 of the Building Code Act.
2. There are several deficiencies that need to be corrected/ listed as follows

ITEM	DESCRIPTION	CORRECTIVE MEASURES

Date

Inspector

From: Richard Beaudry
To: Bill McCaffrey; Ed Picco; Rick Vincent; Sherri Budgell; Tony Pileggi
Date: 4/26/2006 4:22:44 PM
Subject: Elevation Views

To all Building Inspectors,

Please make sure that when carrying out an Occupancy/ Final that you look at the Elevation Views for that perticular file, and that the Elevation Views reflect the Dwelling you are inspecting.
If they DO NOT we require new elevation views before the file can be completed.

It is imperative that you ensure that the dwelling you are inspecting is the one shown on the plans.
If you should have any questions, please feel free to contact me.
Thank You.

Richard.

CC: Guido Mazza; Valerie Klotz

From: Richard Beaudry
To: Angela Lanteigne; Cheryl Gazzola; Donna Walli; Julie Forget; Lyne Ryskie; Sandra Thibault
Date: 5/9/2006 11:43:21 AM
Subject: Foundation Permits (Conditional Permits)

To all Staff,

This is a reminder that " UNDER NO CIRCUMSTANCES", unless cleared by Guido or myself, that any applicant who is issued a Foundation/Conditional permit, cannot proceed past the framing stage.
Should you have any questions please contact me.

Thank You.
Richard.

CC: Andre Guillot; Bill McCaffrey; Ed Picco; Rick Vincent; Sherri Budgell; Tony Pileggi

Sudbury Greater Grand

Interoffice Correspondence

June 2, 2006

TO: **ALL BUILDING SERVICES STAFF**

FROM: **G. A. Mazza**

RE: **Sign In Sheets for Customers of Building Services**

Further to recent complaints registered with my office of preferential treatment at the Building Services counter, please be advised of the following:

Effective immediately, all customers entering Building Services area to undertake business related to our area of service must first identify themselves and sign in at the front counter. This includes all contractors, former and current employees of the City of Greater Sudbury who shall be dealt with in the fashion of "first in; first out" level of service with all other customers on the sign in sheet to ensure fair and impartial service to the customers presenting themselves at our counter.

Further, accurate records of our counter activity during peak periods also helps ensure that when evaluations are made of staffing requirements I have a true reflection of our work activity.

Trusting this is self explanatory, however please feel free to contact me if there are any questions.

GUIDO A. MAZZA, P. ENG.
DIRECTOR OF BUILDING SERVICES/
CHIEF BUILDING OFFICIAL

GAM/vk

From: Richard Beaudry
To: Alfio Mazzuchin; Andre Guillot; Ed Picco; Sherri Budgell
Date: 8/16/2006 5:23:48 PM
Subject: Apartment Applications

This is a reminder to all Plans Examiners that when taking a application for new Apt`s or installing a new Apt. that the following info is always required :

1) plot plan showing parking for the # of units applying for (Section 10- General provisions of by-law tells you # of spaces req`d and sizes and where spaces are not allowed.)

2) Floor plans for each unit

3) Info pertaining to heating for each units (type, separate,...)

4) Wether the entrance is a shared entrance or not (rating required...)

5) If they decide not to use the unit as a rental they MUST sign a waiver form from the permit clerks stating the space will not be rented out.

Should you require more information , please see me.

Thank You.

Richard.

CC: Guido Mazza

Greater | Grand Sudbury
www.greatersudbury.ca

INTEROFFICE MEMO

July 24, 2009

TO: BUILDING INSPECTORS
PLANS EXAMINERS

FROM: Andre Guillot

RE: OVERTIME

This is a reminder that as per Rheal Pitre's memo dated October 31, 2001 (see attached), you must get approval from myself or Guido to work overtime **prior** to working it.

ANDRE GUILLOT
ACTING MANAGER OF CODE COMPLIANCE/
DEPUTY CHIEF BUILDING OFFICIAL

AG/vk

Greater Grand Sudbury

Interoffice Correspondence

October 31, 2001

TO: **Building Inspectors**
Plans Examiners
Project Research Clerks

FROM: **Rhéal Pitre**

SUBJECT: **Overtime**

As of October 31, 2001, clearance from myself or Guido Mazza is required prior to working any overtime.

RHÉAL PITRE
MANAGER OF TECHNICAL SERVICES
BUILDING SERVICES

RP/vk

Greater | Grand Sudbury
www.city.greatersudbury.on.ca

Requirements for Tents

The following excerpts are from the Ontario Building Code.....

Section 2.4.1.1.(5)	=	Conditions requiring a Building Permit.
Section 3.13.1.	=	Regulations for Tents.
Section 3.13.2.	=	Regulations for Air-Supported Structures.

Summary:

Tents less than 60 square meters (645 square feet), not attached to a building, and more than 3 meters (10 feet) from other structures do not require a Building Permit, however there are other agencies that the owner/applicant must contact.

It should be noted that for events which include more than one tent, the Building Code requires the **aggregate** of all tent areas, if within 10 feet of each other, involved in the event to be less than 60 square meters (645sq.ft.) to be exempt from Building Permit requirements.

Site Plans for tents that require a Building Permit will be circulated to the pertinent 'Fire Department'

A letter of approval is required from the local 'Traffic Division' if the tent is being erected on a municipal right of way.

Contact the 'Electrical Safety Authority' for any permits necessary for electrical inspections.

Greater | Grand Sudbury
www.city.greatersudbury.on.ca

Building Permit Application Requirements

1. Letter from the owner/applicant describing the occupancy of the tent, acknowledging the date of the erection and dismantling of the tent as well as the hours of operation for the tent's activity.

2. Fabric specifications. (material shall meet the requirements of CAN/ULC S109-M, "Standard for Flame Tests of Flame-Resistant Fabrics and Films" or NFPA 701 "Standard Method of Fire Tests for Flame-Resistant Textiles and Films".)
   * **CERTIFICATE must be provided**.

3. 4 Site Plans showing location of tent in relation to other structures and lot lines complete with dimensions, streets, fire access routes, overhead hydro wires, and washrooms.

4. Layout plan showing occupant load, furnishings, location of fire extinguishers, emergency lights, means of egress, and exit facilities.

5. Tents containing bleachers, or enclosed with sidewalls, or greater than 225 square meters (2420 square feet) shall require structural engineered sealed drawings showing framing and anchorage details. The engineer will also be required to review the installation and submit a final letter of compliance to the local Building Department. A 'Letter of Commitment' would have to be signed by the Professional Engineer prior to the issuance of a Building Permit.

6. Tents containing bleachers, or enclosed with sidewalls, or greater than 225 square meters (2420 square feet) shall conform with sections 3.3 and 3.4 of the Ontario Building Code. (Egress & Exiting. These issues will be dealt with at application stage)

7. **Once a permit has been issued for a tent, an inspection will be required by the Building Department twenty-four (24) hours prior occupancy.**

Sudbury Greater Grand

Interoffice Correspondence

September 18, 2006

TO: **BUILDING INSPECTORS**

FROM: **G. A. Mazza**

RE: **Technical Notice - Deck Pier/Column Supports**

It has come to my attention that some contractors are modifying the details related to our standard concrete pipe foundation supports for exterior deck pipe supports (copy attached). The modification related to pouring a footing and then placing a 6' x 6' pressure treated wood column on top of the pour pad and then backfilling the wood column to grade and later cutting the column to suit the framing beam to be supported.

This detail can be accepted provided that there is some kind of positive connection between the wood column and poured concrete footing to ensure that a positive transference of column load to footing is ensured and that the load is transferred at the centre of the footing. Further this conversion will ensure no dislodging of the column and footing will occur should the wood column be subjected to frost adfreezing.

The construction detail as well to be acceptable must incorporate preserved wood in conformance to CAN/CSA - 080.15-M89 "preservative treatment if wood for building foundation systems, basements and crawl spaces by pressure process" which is a more stringent standard to that used for standard off the shelf pressure treated wood.

The connection between wood column and footing can be back to back steel angles or a HSS sleeve connected both to the wood column and through to the concrete footings (see attached examples).

Trusting this is clear with respect to the acceptance of this revised detail, however should you have any questions, please do not hesitate to come and see me.

GUIDO A. MAZZA, P. ENG.
DIRECTOR OF BUILDING SERVICES/
CHIEF BUILDING OFFICIAL

GAM/vk

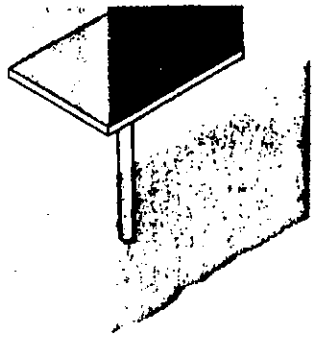

'.16a These connections resist both uplift and lateral loading. The vertical leg of the angle may be increased as necessary for greater end distance or multiple bolting. Where bearing requires the base plate to be larger than the column, the base plate thickness will depend on the area over which the load is distributed, but should not be less than 6 mm.

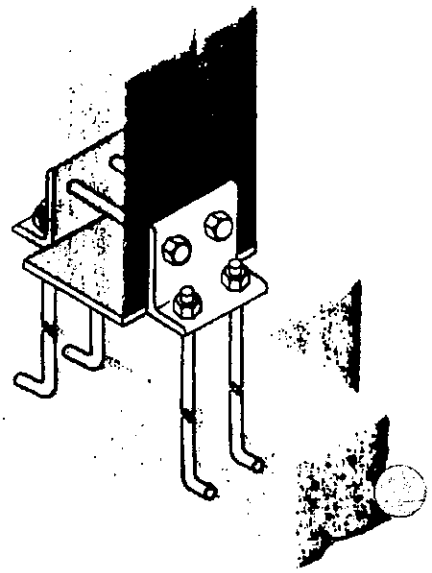

'.16b A variation of Detail 7.16a.

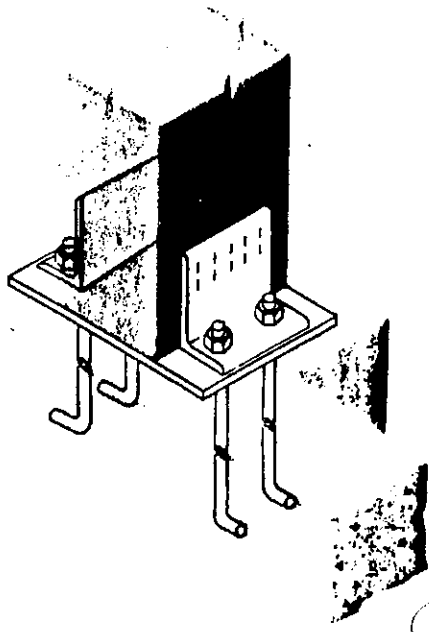

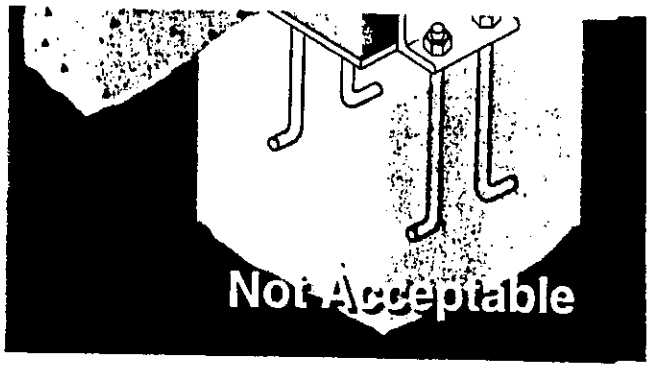

43a A steel "bucket shoe" will encase the wood below the level of the slab and protect the wood against moisture as long as the top of the shoe projects slightly above the slab.

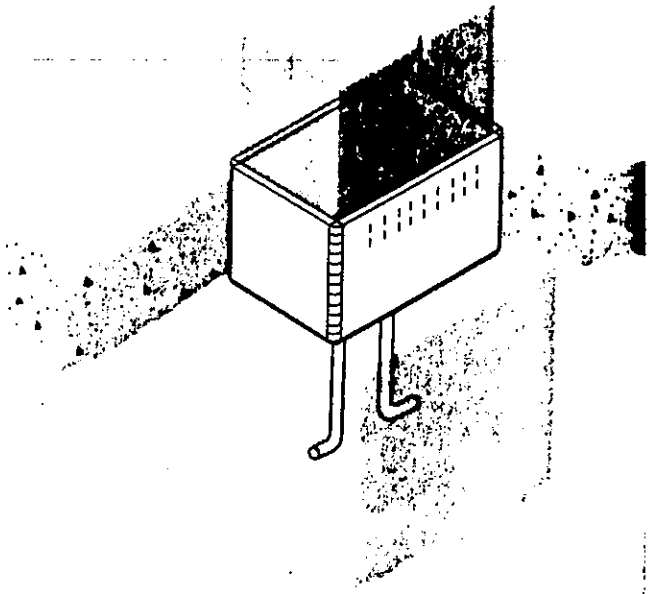

43b Alternative arrangements provide for the column base to be raised to the slab level, and a steel plate used as a moisture barrier. In this case, a base trim may be used if it is necessary to conceal the hardware.

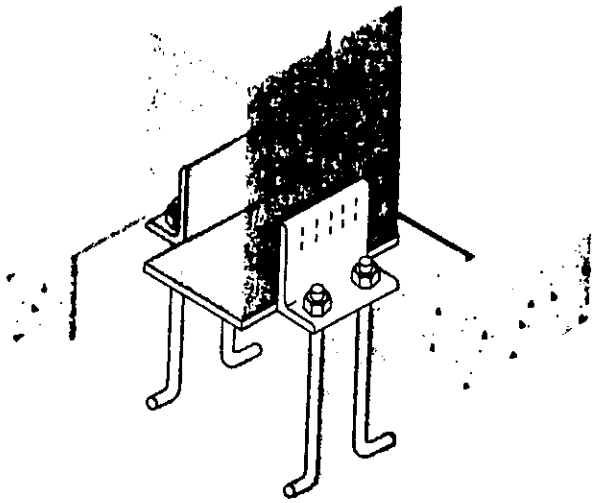

Typical Connection Details

Column to Base

7 A U-shaped anchorage to a concrete support will resist both uplift and lateral loads. A 3 mm bearing plate is sometimes used.

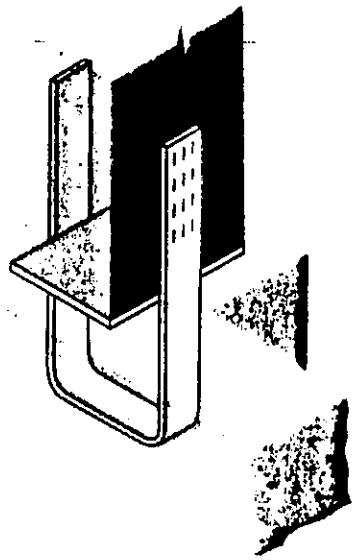

18 If concrete pedestal dimensions are limited, and the cross section of the column is adequate for bearing on the concrete, this connection is suggested. Some uplift and horizontal forces may be resisted. The end of the column must be countersunk to receive the anchor bolt and nut.

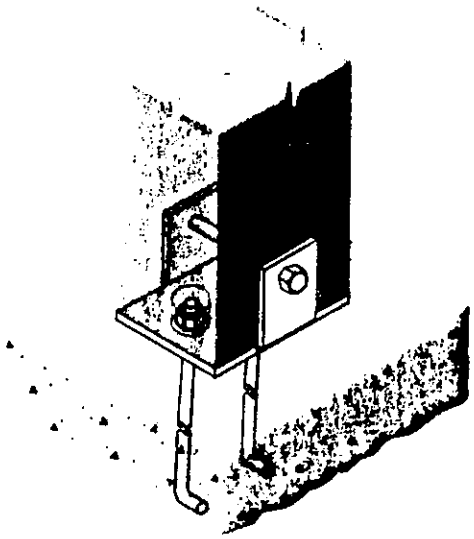

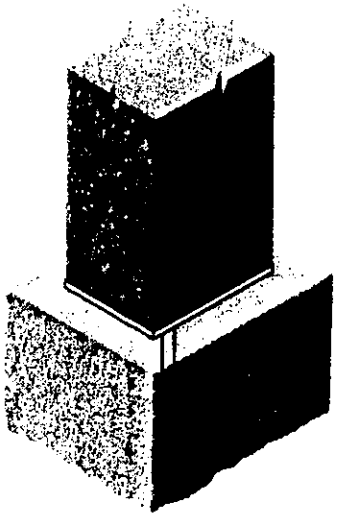

This simple base connection is effective when uplift and lateral forces are negligible. A base plate at least 3mm (1/8") thick prevents moisture transfer from the concrete support.

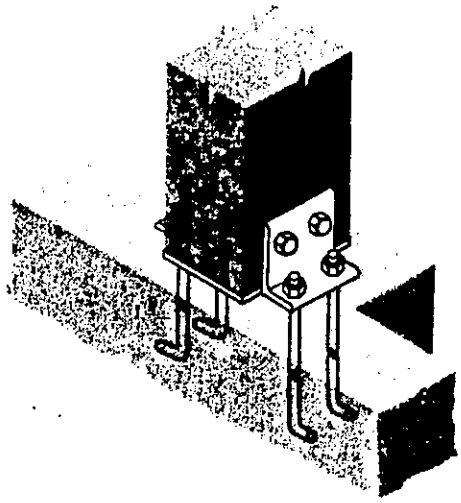

This connection resists both uplift and lateral loading. The base plate thickness depends on the area over which the load is distributed, but should not be less than 6mm (1/4").

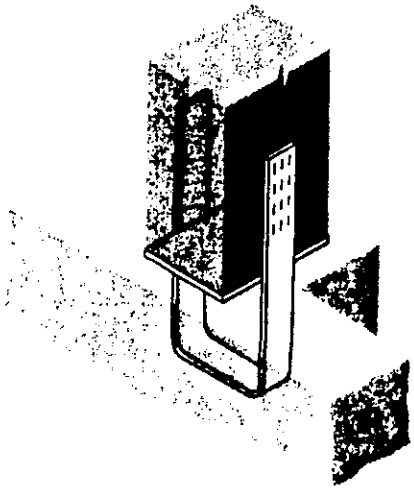

This U-shaped anchorage, fastened with glulam rivets, will resist both uplift and lateral loads. A 3mm (1/8") bearing plate should be used.

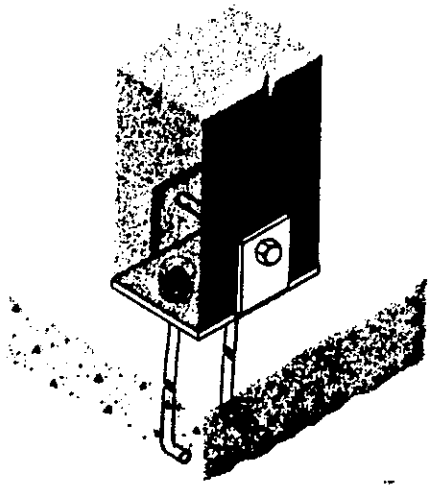

Some uplift and horizontal forces may be resisted by this connection. The end of the column must be countersunk to receive the anchor bolt and nut.

From: Corrie-Jo Delwo
To: Building Services Staff - Inside
Date: Wed, Sep 9, 2009 10:03 AM
Subject: MOE Approval - Trailer Parks

I just spoke with a Senior Environmental Officer at the MOE, who advised me that all trailer parks within the City limits fall under the jurisdiction of their office. Please provide the applicant, who has applied for an addition, deck, accessory structure or new trailer, an approval with **a copy of the key plan and plot plan** to be taken to the MOE office in the provincial building. The location, floor and suite number is on the approval.

Corrie-Jo Delwo
Coordinator of Permits & Approvals Integration
Growth & Development/Building Services
705-674-4455, ext. 4426
Fax: 705-675-1075
Cell: 705-665-4720
cj.delwo@city.greatersudbury.on.ca

From: Corrie-Jo Delwo
To: Building Inspectors; Permit Customer Services Clerks; Plans Examiners
Date: Tue, Jun 16, 2009 4:16 PM
Subject: Geotechnical Commitments and Reports

N.B. With the creation of a new subdivision and/or street in a subdivision, a Geotechnical Commitment and/or a Report may be required. Please confirm with a Plans Examiner at the time the application has been submitted and prior to issuing a building permit whether or not a commitment certificate and/or a Geotechnical Report is required.

Thank you.

Corrie-Jo Delwo
Coordinator of Permits & Approvals Integration
Growth & Development/Building Services
705-674-4455, ext. 4426
Fax: 705-675-1075
Cell: 705-665-4720
cj.delwo@city.greatersudbury.on.ca

From: Andre Guillot
To: Building Inspectors; Permit Services; Plans Examiners; Ron Liinamaa
Date: Mon, Apr 27, 2009 1:43 PM
Subject: Staff please note

As of Today , A Building Permit will be required for the following :

An elevated deck / stairs of more than 24 " above grade attached or detached providing principal access to a building .

Andre Guillot
Plans Examiner
CGS Building Services
674-4455, extension 4326
andre.guillot@city.greatersudbury.on.ca

CC: Corrie-Jo Delwo; Guido Mazza; Valerie Klotz

From: Richard Beaudry
To: Andre Guillot; Bill McCaffrey; Ed Picco; Ken Jones; Sherri Budgell
Date: Tue, Dec 4, 2007 1:34 PM
Subject: Retro Fit Applications

To all Plans Examiners,

Please note that when dealing with an application for a Retro Fit from the SFD, that we need a copy of the report from the applicant to ensure that the Zoning is not being altered as per the proper use. We need possibly check the Vernon`s Directory to see that we are not creating new units.

You MUST FILL OUT A ZONING CHECK LIST. This way we confirm the zoning, the use and the parking requirements.

Should you require further info on the above, please see me.

Thank you.

Richard.

CC: Guido Mazza

From: Richard Beaudry
To: Angela Lanteigne; Cheryl Gazzola; Donna Walli; Inspectors & Plans Examiners
Date: Tue, Aug 28, 2007 10:20 AM
Subject: Barns and Dog Kennels

To Staff,

Please be advised that when dealing with applications for barns and dog kennels in a " A " or " RU " zones that there is a special requirement for setbacks to Residential zones and buildings which must be followed and enforced. Minimum 984' setback to the building or lot (residential).

The section is in the actual zoning requirements under Special Restrictions Near Residential Lots and Zones.

Should you require further information , please see me.

Thank you.

Richard.

CC: Corrie-Jo Caporale; Guido Mazza

Greater Grand Sudbury
www.greatergrandsudbury.ca

BUILDERS' BULLETIN

HVAC Drawings & Pre-Engineered Components

JANUARY, 2008

HVAC DRAWINGS

BACKGROUND

As of January 1, 2006, the Ontario Ministry of Municipal Affairs required that any firm submitting designs of any type to municipalities in connection with a building permit must be registered and obtain a Ministry issued designer registration number (Building Code Identification Number or BCIN #). For example: registration requirements for designers who design HVAC systems for the new build market.

During the period of January 1, 2006 and December 31, 2007, the Chief Building Official/Director of Building Services of the City of Greater Sudbury has permitted the issuance of "Conditional Foundation and/or Structural Shell" permits pending the submission of HVAC drawings due to the lack of "registered" designers within the City of Greater Sudbury.

Further to the general agreement and discussion by the membership of the Development Liaison Advisory Committee (DLAC) on September 20, 2007, the following changes are being implemented to improve the efficiency and turn around times in Building Services:

ADDITIONAL FEES FOR CONDITIONAL PERMITS

As of January 1, 2008, as per By-law 2005-165, the Building Services Section will be applying an additional fee of $230.00 to Building Permit applications upon which the applicant has requested a "conditional permit" pending the submission of HVAC drawings:

> "A BY-LAW OF THE CITY OF GREATER SUDBURY RESPECTING CONSTRUCTION, DEMOLITION, CHANGE OF USE PERMITS, INSPECTIONS AND FEES (Schedule 'C'):
>
> Conditional Permit $230.00"

Under Subsection 8(3) of the Ontario Building Code Act it gives chief building officials discretionary power to consider and issue Conditional permits. Conditional permits are intended to expedite construction when planning approvals are met but not all plans for the building are completed. This allows construction to start before all plans have been completed.

94

BUILDERS' BULLETIN

HVAC Drawings & Pre-Engineered Components

JANUARY, 2008

PRE-ENGINEERED COMPONENTS

ADDITIONAL REQUIRED DOCUMENTATION

As of January 1, 2008, the Chief Building Official/Director of Building Services has requested that drawings for the following must be submitted at the application stage with the building drawings; failure to comply will result in an incomplete application and a building permit will not be issued until pre-engineered shop drawings are received:

Pre-engineered components (two copies):

Truss engineering package - truss layout/truss designs
Engineered floor system package - floor layout / beam design/ floor joist span table
Engineered beam design (Glu-lam, LVL Parallam)
Structural component not prescribed in Part 9 of the Ontario Building Code, qualified stamped design by an engineer to be provided. (e.g. beam with point load, lintels under trusses spanning over 32'2", railing systems beyond scope of SB7)

All drawings shall be to scale, dimensioned and provide sufficient information that describes the extent of proposed work.

From: Sue Tremblay
To: Cheryl Gazzola; Donna Walli; Julie Forget; Lyne Ryskie
Date: 10/25/2006 11:43:36 AM
Subject: Section 391 Charges - South End Rock Tunnel

Hello everyone, there will be a public meeting tonight regarding the above noted. If all goes well, these charges will be effective starting tomorrow morning. I've attached the information required to apply these charges to the building permit system. It is very similar to Development charges except now there are three separate charges to watch for:

SR for South End Rock Tunnel - Residential/Multi-dwelling (per unit charge)
SC for South End Rock Tunnel - Commercial/Industrial (per square meter charge)
SM for Monte Principale - Lionel E. Lalonde (per unit charge)

(Montee Principale was approved by Council and the Public Meeting was held in March, so this charge actually came into effect at that time.)

Jon Duncan will be putting these codes in the system today so that they will be ready to use tomorrow morning. I will be e-mailing everyone again tomorrow morning to confirm that everything is a go.

Let me know if you have any questions or concerns regarding the above-noted.

Regards,

Sue

SueTremblay
Supervisor of Accounts Receivable
Finance Department
City of Greater Sudbury
sue.tremblay@greatersudbury.ca
Phone #: (705) 674-4455 ext 4344
Fax #: (705) 673-4875

CC: Guido Mazza; Jon Duncan; Marinella Piccin; Paddy Buchanan; Richard Beaudry

What is a garden suite?

Garden suites, sometimes called "granny flats", are small, self-contained dwellings that are designed to be portable. "Self-contained" means that each unit has its own kitchen, bathroom and living area.

In most cases, water and sewer services are connected to those of the "host" house.

Garden suites are usually installed in the side or rear yard of an existing house, and must be able to be removed when no longer needed.

Are garden suites a new concept?

Garden suites have been developed successfully in other countries, such as Australia.

In 1984, the former Ontario Ministry of Housing developed a granny flats demonstration project in three regions of the province. The aim of the project was to set up garden suites in a number of communities so the potential of these units could be examined. A total of 12 units were set up.

The results were very positive – the final assessment of the project in 1990 reported that:

- For almost all occupants and hosts, the garden suite living arrangement proved to be very satisfactory. The well-being of occupants was enhanced and the stress of caregivers was reduced. Host families also reported the benefits of both increased companionship and services provided by the elderly occupant (such as child care and cooking.)

- Municipal officials, and the vast majority of neighbours who had garden suites near their properties, thought the concept worked very well.

Who would live in a garden suite?

- Garden suites can be an ideal form of housing for seniors and persons with disabilities who are largely capable of living independently, but who require some support to live on their own.
- Ontario's population of seniors is increasing, and will continue to do so. From 1992- 2016, it is expected that the number of people aged 65 and older will increase by 87 per cent.
- There is an increasing recognition of the special needs of persons with disabilities. For both seniors and persons with disabilities, housing is a primary concern since most traditional housing stock is not geared to their needs.
- Garden suites have the added advantage of allowing people to stay in their communities, and to be close to their families.
- Garden suites can also be less costly than a nursing home or other institution.

What do I need to know about installing a garden suite on my property?

- In most cases, municipalities do not permit two residential buildings on one lot. As a result, the homeowner usually needs special permission from the municipality to install a garden suite.
- Amendments to the Planning and Municipal Acts allow municipalities to pass a "temporary use" by-law to permit a garden suite for a period of up to 10 years. This is up from the limit of three years, which still applies to other types of temporary uses.
- A longer time period is beneficial for homeowners, since they do not have to go to the trouble of renewing their temporary use by-law allowing the garden suite as often.
- The legislation does <u>not</u> require that municipalities permit garden suites. There may be situations where garden suites would be inappropriate (for example, where lots are too small).

An agreement may be required

The legislation also allows municipalities to require that a homeowner who wishes to install a garden suite sign an agreement.

It is expected that, because such agreements allow municipalities to regulate garden suites more effectively, more units of this type will be allowed.

The agreement can cover:

- the appearance of a garden suite, including how it is designed and constructed;
- how the garden suite is to be maintained;
- the name of the person who is to live in the garden suite; and
- when the garden suite is to be removed (for example, when the occupant moves out, or when the temporary use by-law expires).

The agreement can also require the homeowner to post a bond, to ensure compliance with the terms of the agreement.

Can trailers or mobile homes be used as garden suites?

Since municipalities can set the rules for the appearance of a garden suite, they may decide to allow trailers and mobile homes as garden suites, but are not required to do so.

Some municipalities may require that garden suites be small modular houses which "blend in" with the surrounding community. Of course, such houses must still be designed to be portable, so that they can be removed later.

Can other permanent buildings be treated as a garden suite?

No. Converted detached garages, coach houses or other outbuildings are not designed to be portable. Therefore, they cannot be treated as garden suites.

Homeowners who wish to use these types of buildings as accommodation can apply for a permanent or temporary rezoning of their property (for up to three years) to allow two houses. However, municipalities may be reluctant to approve such rezoning without the security of a garden suite agreement.

What is the difference between a garden suite and an apartment in a house?

A garden suite is a separate building which is not attached to the main house on the property. An apartment in a house is a self-contained unit created by sub-dividing or adding on to an existing house.

If you are interested in putting an apartment in your house, talk to your municipality to see if it's permitted and to find out about the necessary permits.

Ministry of Agriculture, Food and Rural Affairs

Ministère de l'Agriculture, de l'Alimentation et des Affaires rurales

P.O. Box 2004
Kemptville, Ont.
K0G 1J0
Tel: (613)258-8304
Fax: (613)258-8392

P.O. Box 2004
Kemptville, Ont.
K0G 1J0
Tél.:(613)258-8304
Téléc.(613)258-8392

Ontario

RECEIVED

OCT 23 2006

OFFICE OF
CHIEF BUILDING OFFICIAL

Food Safety and Environment Division

October 18, 2006

Dear Municipal Staff who attended Nutrient Management Information Sessions:

Thank you for attending one of the Municipal Information Sessions that OMAFRA sponsored in March and April of 2006. Through information sessions like these, staff from OMAFRA are committed to keeping you informed of the revised regulations under the Nutrient Management Act, 2002.

As a follow-up to these meetings, OMAFRA promised to keep you informed of further developments related to Nutrient Management as they occur. I have included a Question and Answer document providing information that was not available at the sessions as well as an article titled '***Building or renovating a livestock barn or manure storage facility? This is what you need to know about the Nutrient Management Act'***. Please feel free to provide this article to producers in your area.

The information kit provided to you at the meeting contained important materials including a copy of the slide set which was presented. Please refer to this material for additional information.

I trust that the building permit process is proceeding well and that OMAFRA is meeting your information needs. If you require additional information, you may contact me directly or call our Nutrient Management Information Line at 1-866-242-4460.

Yours truly,

Earl Pollock
Field Manager

Building or renovating a livestock barn or manure storage facility? This is what you need to know about the Nutrient Management Act.

Farmers in Ontario considering a building project should be aware that they may be required to have an approved nutrient management strategy (NMS) and in some cases, a nutrient management plan (NMP) prior to starting your building project.

What are NMS and NMP?

The NMS is a document that describes generation, storage and destination of manure and other prescribed materials. It provides information such as: number of animals, barns, manure storages, livestock yards and runoff management.

The NMP details how manure, fertilizer and other nutrients are applied to a given land base. It is a five year plan that details the characteristics of the land, crop rotation, as well as cropping and nutrient application practices.

What projects require an approved NMS?

On any farm, where the number of farm animals is greater than 5 nutrient units (NU) or will be greater than 5 NU upon completion of construction, the following projects require an approved NMS:

1. Construction or excavation of any earthen manure storage (example, lagoon) including expansions of existing earthen storages,
2. Any project e.g. construction, expansion or renovation involving livestock structures that requires a building permit under the Building Code Act*, and
3. Construction of any manure storage facility that requires a building permit under the Building Code Act*.

* NMS is also required in these situations in unorganized townships.

How many animals does it take to be greater than 5 NU?

Each box below is an example of how many animals is required to be greater than 5 NU:

6 beef cows	4 Holstein cows	31 feeder hogs
1501 broilers (9 week cycle)	31 ewes	751 laying hens
16 beef stockers/backgrounders	18 sows (non SEW)	6 horses (medium frame)

For other livestock categories, call the toll free Nutrient Management Information Line at 1 866-242-4460 or on-line at:
http://www.omafra.gov.on.ca/english/livestock/nutrient/nutrient.html

over

Does this mean I must document the 5 year crop plan for my farm?

Not necessarily. The five year crop plan would be part of a nutrient management plan. Only some operations that are required to have a NMS must also have a NMP. Although the NMP is recommended to all farm operations that apply nutrients, only those operations that must have a NMS AND fall under one of the following categories must also have a NMP under the current regulations for the *Nutrient Management Act* (2002):

1. Livestock numbers ≥ 300 NU in the farm unit (NMP on file on farm)
2. Any part of the land in the farm unit is within 100 metres of a municipal well (NMS approved by OMAFRA and NMP on file on farm)

How do I get my NMS approved?

First of all, NM strategies and NM plans must be prepared by someone certified under the *Nutrient Management Act* (2002). There are two options for certification: a farmer can take the necessary courses to be certified or you can hire a certified consultant to prepare your NMS. Once your NM strategy has been prepared, it is sent to OMAFRA in Guelph for approval.

For more information on consultants, nutrient management courses or other nutrient management information, call the toll free Nutrient Management Information Line at 1 866-242-4460 or on-line at: http://www.omafra.gov.on.ca/english/agops/index.html.

-30-

Common questions from municipalities about nutrient management legislation

1. **What are the new rules around building permits under the Nutrient Management Regulations?**

The amended regulation now requires that **anyone who applies for a building permit** for any building or structure used to house farm animals or to store manure **must** have a provincially approved Nutrient Management Strategy. If the Building Code requires a building permit for either livestock housing or manure storage, then the Nutrient Management Strategy must be approved and a Record of Approval from OMAFRA must be supplied to the municipal Building Official by the producer before the building permit can be issued. The rationale is that if a producer is going to build a structure where nutrients need to be managed or make changes to the structure where a building permit is required, then it needs to be built right from the start.

Your local OMAFRA Nutrient Management Specialist can supply details to farmers on their options for the preparation and approval of a Nutrient Management Strategy. The OMAFRA's toll free Nutrient Management Information Line (1-866-242-4460) can also provide information on the process.

Although this appears to be straightforward, there are some special cases that need to be addressed:

- A new horse riding arena designed such that stalls or penning capable of housing enough horses to generate > 5 Nutrient Units would require an approved Nutrient Management Strategy.
- If the riding horse arena (without stalls) is attached to the barn which houses the horses it would require an approved Nutrient Management Strategy. If it is not attached and has no housing contained within it, than an approved Nutrient Management Strategy is not required.
- Earthen lagoons, permanent nutrient storage facilities made of earth, for storing manure do not require a building permit, but do still require a provincially approved Nutrient Management Strategy.
- Building projects to replace livestock housing facilities after a fire or other disasters would still require an approved Nutrient Management Strategy.

2. **Does every change to a livestock barn requiring a building permit require an approved nutrient management strategy?**

Yes. All construction, expansion and renovation projects requiring a building permit do require an approved NMS. If municipalities are not sure whether the building project requires an approved nutrient management strategy, they should contact OMAFRA for assistance.

3. **What does the Record of Approval tell the Municipality, and what does the Municipality do with it?**

The Record of Approval will provide details to the municipality with regard to existing and proposed facilities for livestock housing or manure storage. It contains site sketches, a location description and details regarding the proposed project. Building officials can check that the project information provided by the producer is consistent with the Record of Approval. This information is intended to assist the municipality in issuing building permits for properly sited and constructed facilities according to the requirements of the building code.

Nutrient Units

4. **How should municipal staff calculate Nutrient Units (NU)?**

Nutrient Units are the standardized measurement used by the Ontario Regulations under the Nutrient Management Act to calculate the nutrient content (nitrogen and phosphorous) of manure for each species of livestock. The requirement for an approved Nutrient Management Strategy under the Regulation does not apply to operations that generate 5 or fewer NU. This is particularly important when dealing with small operations, such as small horse operations where only 2 or 3 horses may be housed. For these operations, even if a Building Permit is required, the requirement for an approved Nutrient Management Strategy is not triggered.

Example:

- NU refers to Nutrient unit. 1 NU = 1 beef cow (includes unweaned calf) or 3 backgrounders/stockers or 2 shortkeep steers/heifers or 1 medium frame horse

It is important to note that all livestock on a farm unit where a building project is taking place are accounted for through the nutrient unit calculations to determine if a NM strategy is required.

Resources for calculating NU are available to municipal staff, including the Nutrient Management Calculator sheet provided in your kit from the Information Session. This list provides NU values for the main livestock types, but is not complete, as it was used as an example. NU calculators for a complete list of livestock types, are available on the OMAFRA website at: http://www.omafra.gov.on.ca/english/livestock/nutrient/nutrient.html.

Municipal staff may also contact the Nutrient Management Information Line at 1-866-242-4460 for assistance.

Compliance

5. What is the status of on-farm inspections and compliance with the Nutrient Management Regulation?

Agricultural Environmental Officers with the Ministry of Environment (MOE) have been undertaking both pro-active on-farm inspections and incident response for over a year now. These specialized Provincial Officers have had extensive training in agriculture, and work with the industry to achieve compliance with a variety of tools available to them. MOE has just recently hired an additional 10 Agricultural Environmental Officers who will be deployed throughout the province. We can therefore expect an increased presence on farm, and more farm inspections taking place. Please contact your local MOE district office for more information.

Municipal Bylaws

6. What are some options for municipalities with Nutrient Management By-laws in relation to the amended provincial regulation?

Since OMAFRA ran its series of Municipal Information Sessions in March and April of 2006, a number of municipalities have considered repealing their existing Nutrient Management by-laws in light of the amended Nutrient Management regulation. With the new focus on the building permit process driving the phase-in of farms, municipalities are confident that more farms will be phased-in under the provincial regulation, eliminating the need for by-laws dealing with the same subject matter. Section 61 of the Nutrient Management legislation supersedes any existing municipal bylaws when dealing with the same subject matter.

Other municipalities that have not repealed their by-laws, have embarked on discussions to assess the need for continuing by-laws.

7. What happens with existing or expiring Municipal Plans?

Where existing municipal by-laws require a Nutrient Management Plan to be in place, the plan will remain in effect until the by-law is repealed or until the Plan expires, whichever comes first.

Where the plan expires, there may be no need for renewal unless the by-law remains in effect, or the farm is 300 or more NU (a large farm). For farms with 300 or more NU, the municipal plan would have been 'deemed approved' until its expiry date. At that time, the farm will have to prepare a new plan according to the current regulation.

Where renewal is not required because the bylaw has been repealed, the trigger for phase-in would come with the application for a building permit, as described in the answer to Question 1.

Registrations under the NMA

8. What is a Registration under the NMA?

Prior to the regulation amendment in September 2005, farms generating more than 300 NU (a large farm) were required to submit a Nutrient Management Strategy and Plan for approval from OMAFRA. Under the amended regulation, this approval is no longer required (unless biosolids are applied, or the farm unit is within 100 m of a municipal well). However, in order to make sure that these farms are on record with the province, all farms generating 300 NU are required to register their operations with OMAFRA. For farms generating 300 or more NU a provincially approved strategy prior to September 29th, 2005 will be automatically registered with OMAFRA. Farms with 300 or more NU who do not currently have a provincially approved strategy are required to register their operation with OMAFRA. These farms must have a Nutrient Management Strategy and a Nutrient Management Plan prepared by a certified individual on file on the farm.

Strategies and Plans

9. Is a nutrient management strategy (NMS) the same thing as a nutrient management plan (NMP)?

No. The Nutrient Management Strategy sets out the environmentally acceptable methods for managing all prescribed materials GENERATED on the identified farm unit. It provides information such as: number and type of animals, barns, manure storages, livestock yards and runoff management.

The NMP details how manure, fertilizer and other nutrients are APPLIED to a given land base. It typically is a five year plan that details the characteristics of the land, crop rotation, as well as cropping and nutrient application practices. It optimizes the utilization of the nutrients by crops in the field and minimizes environmental impacts.

References to a Nutrient Management Plan in a Municipal By-law usually reflect both the Nutrient Management Strategy and the Nutrient Management Plan.

10. When does a farmer need a NMS and when do they need a NMP?

A NMS is required for any project requiring a building permit e.g. construction, expansion and renovation involving livestock housing or manure storage or if you have 300 NU (a large farm) or greater or if you were required to have a NMS under the previous version of the regulations.

A NMP is required only if a nutrient management strategy is required first and one of the following:

- the operation is 300 NU (a large farm) or greater OR
- there is a municipal well within 100 m of the boundary of the farm unit.
- land apply non-agricultural source material to land identified in the farm unit

11. Do all farms in Ontario have to complete a nutrient management plan (NMP) by 2008.

Not necessarily. Farms with greater than 5 NU are phased-in (i.e. required to have a nutrient management strategy) if at least one of the following conditions apply:

- constructing an earthen storage,
- a building permit application for any structure that houses livestock or a permanent manure storage facility or
- expanding to 300 NU or greater.

The trigger for farms to be phased in is the application for a building permit from the municipality.

Manure Storages

12. Does a farmer or agricultural operator have to build a concrete tank to manage the runoff from a livestock farm?

This is one option but there are other acceptable ways to manage runoff. Other options include roofed facilities and/or vegetative filter strips (designed by an engineer and approved by MOE). If certain conditions are met, some farms can use a permanently vegetated area (i.e. a permanent hay field or permanent pasture) as a means to manage runoff. Further information on this subject can be obtained from your local Nutrient Management Specialist or the Nutrient Management Information Line (1-866-242-4460).

13. Does the farmer have to build a separate storage facility for manure?

Once again, this is one option but there are other choices. With solid manure systems, manure "packs" or in-barn storage is another option. Temporary field storage and bedding packs in permanent feedlots can be used singularly or in combination with permanent dedicated solid manure storage facilities.

14. Can farmers still temporarily store solid manure in the field?

Yes. Temporary field storage is still allowed for solid manure providing the field meets certain conditions (eg. the soil cannot consist of mostly sand over bedrock, or be within 50 m of watercourse, etc.) and the farmer manages it properly (eg. does not store it in one location too long) For more information on this topic, producers should call the Nutrient

ANDREA
WATCH FOR
NUTRIENT MANAGEMENT
ACT ISSUES

B. Lautenbach
V. Mazza
E. Serfas
B. Rousseau
B. Gatzios

RECEIVED
AUG 0 2 2006
OFFICE OF
CHIEF BUILDING OFFICIAL

BY-LAW 2006-173Z

A BY-LAW OF THE CITY OF GREATER SUDBURY TO AMEND BY-LAW 83-300, BEING THE COMPREHENSIVE ZONING BY-LAW FOR THE FORMER TOWN OF VALLEY EAST AND THE FORMER TOWN OF ONAPING FALLS

WHEREAS the Council of The City of Greater Sudbury deems it desirable to amend By-law 83-300, the Comprehensive Zoning By-law for the former Town of Valley East and the former Town of Onaping Falls;

NOW THEREFORE THE COUNCIL OF THE CITY OF GREATER SUDBURY HEREBY ENACTS AS FOLLOWS:

1. By-law 83-300, the Comprehensive Zoning By-law for the (former) Towns of Valley East and Onaping Falls, Schedule "A" attached thereto, is hereby amended by changing the zoning classification of the following lands from "A", Agricultural Reserve to "A-17", Agricultural Reserve Special.

2. Property Description: Parcels 35114 and 35115 ,
Parts 1, 2 and 3, Plan 53R-16942, i
In Lot 7, Concession 1,
Township of Capreol,
City of Greater Sudbury.

3. The following Paragraph is hereby added to Part VII, Section 5, Subsection (5) of By-law 83-300:

"(q) A-17 (WILD GAME AND DOMESTIC FARM ANIMAL BUTCHER SHOP)
Capreol Township Map 2

108

Within any area designated A-17 on the Zone Maps, all provisions of this by-law applicable to "A" Zones shall apply subject to the following modification:

(i) That in addition to the uses permitted under Subsection (2) of Section 5 of Part VI, a wild game and domestic farm animal butchering business shall be permitted on the property comprised of Parcels 35114 and 35115 SES, Parts 1, 2 and 3, on Plan 53R-16942, in Lot 7, Concession 1, Capreol Township."

4. It is hereby certified that this amending By-law is in conformity with the Official Plan for the Sudbury Planning Area.

5. Any person or public body may appeal the passage of this By-law to the Ontario Municipal Board by filing with the City Clerk:

(i) a Notice of Appeal setting out the objection to the By-law,

(ii) reasons in support of the objection, and

(iii) the fee prescribed under the *Ontario Municipal Board Act*,

within 20 days of the giving of notice of passage of the By-law by the City Clerk.

If these materials and fees have not been filed with the City Clerk within this period, this By-law shall be deemed to have come into force on the day it was passed.

If these materials have been received within that time, this By-law shall not come into force until the appeal has been disposed of by the Ontario Municipal Board.

READ A FIRST AND SECOND TIME IN OPEN COUNCIL this 12th day of July, 2006.

_____ Mayor

_____ Clerk

READ A THIRD TIME AND FINALLY ENACTED AND PASSED IN OPEN COUNCIL this 12th day of July, 2006.

_____ Mayor

_____ Clerk

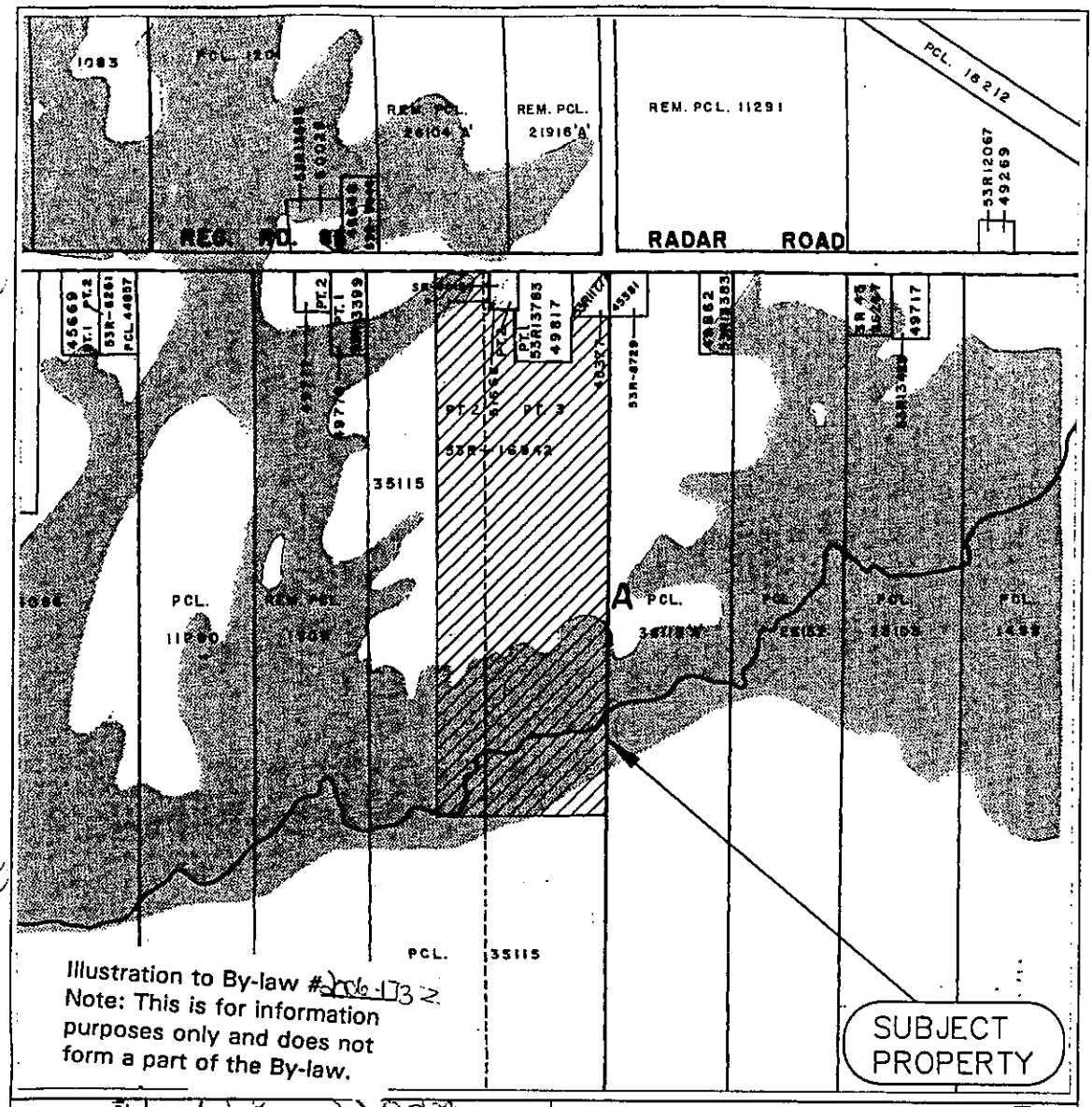

Illustration to By-law #2006-132
Note: This is for information purposes only and does not form a part of the By-law.

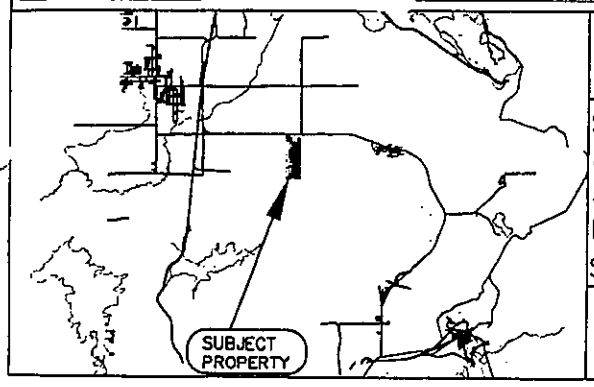

Growth and Development Department

Subject Property being Pcls. 35114 & 35115, Plan 53R–16942, Parts 1, 2 & 3, Lot 7, Con. 1, Twp. of Capreol, 1433 Radar Road, Hanmer, City of Greater Sudbury.

751–7/06–3

Not to Scale

Date: 2006 03 23

Sudbury Greater Grand

Interoffice Correspondence

October 5, 2006

TO: **BUILDING SERVICES STAFF**

FROM: **G. A. Mazza**

RE: **By-law #2006-229**
Regulating the Grade of Driveways

Attached for your information is a copy of the above noted by-law which came into effect on September 27, 2006.

Guido Mazza per VK

GUIDO A. MAZZA, P. ENG.
DIRECTOR OF BUILDING SERVICES/
CHIEF BUILDING OFFICIAL

/vk

Attachment

RECEIVED

OCT 0 5 2006

OFFICE OF
CHIEF BUILDING OFFICIAL

BY-LAW 2006-229

**A BY-LAW OF THE CITY OF GREATER SUDBURY
TO REGULATE THE GRADE OF DRIVEWAYS**

WHEREAS the Council of the City of Greater Sudbury deems it desirable for public safety to establish a policy requiring applicants for building permits to construct driveways and highways at a safe grade;

NOW THEREFORE THE COUNCIL OF THE CITY OF GREATER SUDBURY HEREBY ENACTS AS FOLLOWS:

1. The Council of the City of Greater Sudbury hereby adopts as a policy the following provisions:

    1. Persons applying for a building permit from the City shall be required to construct driveways at a grade not exceeding 10%.

    2. For existing draft plans of subdivision, 10 % road grades will be permitted, where it can be proven to the satisfaction of the City Engineer that the subdivision was originally designed with a 10 percent road grade. New subdivisions must have a maximum of 8 percent road grades, except as permitted in Item 3 below.

    3. Road grades up to a maximum of 10 % on local streets in rock only locations will be acceptable in exceptional cases, and the streets must be designed to the following criteria:

        (a) a 10 % road grade will be allowed over a maximum distance of 100m (length between End of Vertical Curve (EVC)/Beginning of Vertical Curve (BVC), or BVC/EVC).

        (b) the increased road grade will be permitted only for straight sections of road, i.e. no horizontal curves will be permitted.

        (c) approaches to the BVC/EVC shall have a maximum two % grade for a minimum distance of 20m with no intermediate intersections.

        (d) pedestrian movement shall be accommodated on sidewalks with

2. Despite Section 1 above, the General Manager of Infrastructure and Emergency Services may approve driveway grades in excess of 10% in his or her sole discretion, when satisfied that no safety issues are involved.

3. By-law 2002-134 is hereby repealed.

4. This By-law shall come into force and take effect upon the final passage thereof.

READ A FIRST AND SECOND TIME IN OPEN COUNCIL this 27th day of September, 2006.

_____ Mayor

_____ Clerk

READ A THIRD TIME AND FINALLY ENACTED AND PASSED IN OPEN COUNCIL this 27th day of September, 2006.

_____ Mayor

_____ Clerk

From: Guido Mazza
To: Building Controls Permit Services Staff; Building Controls Technical Staff; Mario Tedeschi
Date: 3/23/2006 4:34:31 PM
Subject: Bill 124 / Partial Permits Issuance

Ladies and Gentlemen

This shall serve as a clarification to the Dec.30th/05 interoffice memorandum on Bill 124 implementation.

In that memo I noted that we would not hold up a partial permit issuance because of lack of HVAC information on a single family residential home. The HVAC system information includes the information supplied for the HRV system, therefore if we have no info on the ventilation system ie) the HRAI Residential Mechanical Ventilation Design Summary form we can still issue a partial permit.

Hopefully this shall serve to clarify my position on the issue, however should anyone have any further questions please feel free to contact me .

Thanks

Guido

Guido A. Mazza, P. Eng.
Director of Building Services/
Chief Building Official
Phone: 671-2489 extension 4284
Fax: 675-1075
e-mail: guido.mazza@city.greatersudbury.on.ca

CC: Valerie Klotz

PART IX

RETAIL SALES OF CIGARS, CIGARETTES AND TOBACCO

9.-(1) No person shall, in the City, sell by retail or offer for sale by retail, tobacco, cigars or cigarettes, other than at a hotel, without holding a current valid licence for such business issued under the provisions of this By-law.

(2) Every person to whom this Part relates shall at all times post and keep posted in a conspicuous place in the premises, in a manner satisfactory to the Issuer of Licences, a sign or signs advising that Federal legislation prohibits the sale of tobacco to any person under the age of nineteen years.

(3) Any person holding a convenience store licence issued under Part VIII of this By-law is not required to hold an additional licence under this Part IX.

PART X

KENNELS

10.-(1) In this Part,

"kennel" means an establishment where dogs, cats or other small domestic animals or household pets are bred or raised primarily for the purpose of sale, or are trained or boarded for gain or profit but does not include a pound.

(2) No person shall operate a kennel in the City without holding a current valid licence for such business issued under the provisions of this By-law.

Kennel - permitted - where zoned

(3) A kennel shall be permitted only in premises zoned for the purposes of the boarding and breeding of dogs or cats.

Floors - in kennel - requirements

(4) The floors of each room in which dogs are kept shall be:

(a) constructed of an impermeable material; and

(b) flushed with water and deodorized with a suitable disinfectant daily or more often if necessary and that the animals should be removed when this is being done; and

(c) if such room is physically attached to a building used for human habitation, graded to an adequate drain which shall be connected to a municipal sewage system or sewer disposal system.

Lighting system - kennel rooms - requirements

(5) Each room that is used for the housing of dogs or cats shall be equipped with a lighting system that is so designed, constructed and maintained that:

(a) it distributes light as evenly and with as little glare as possible;

(b) it provides adequate light for the proper observation of every animal in the room; and

(c) it is adequately lighted for a continuous period of at least eight hours in every twenty-four hour period.

Ventilation - kennel rooms - requirements

(6) Each room that is used for the housing of dogs or cats shall provide ventilation for the health, welfare and comfort of every dog or cat by either:

(a) having an opening or openings for natural ventilation with a minimum aggregate unobstructed free flow area of one per cent of the floor area of the room; or

(b) having a mechanical ventilation device on working order which changes the air at least two times each hour.

117

Minimum temperature - kennel rooms

(7) Each room that is used for the housing of dogs shall, at all times, be maintained at a minimum temperature of 9 degrees Celsius for the health, welfare and comfort of every dog or cat therein.

Cage - pen - construction - requirements

(8) Each cage or pen used for the housing of dogs or cats shall be so constructed and maintained that:

(a) every dog or cat in the cage or pen may comfortably extend its legs to their full extent, stand, sit, turn around and lie down in a fully extended position;

(b) it is not likely to harm any dog or cat therein;

(c) any dog or cat therein cannot readily escape therefrom; and

(d) it may be readily cleaned.

Screens - on doorways - windows - required

(9) Each doorway, window and outside opening of a cage or pen used for the housing of dogs or cats shall be screened during the period of May 1st to October 1st of each year.

Yards - runways - requirements

(10) The yards and runways in a kennel shall be:

(a) fenced; and

(b) if within 30 metres of an occupied building:

(i) paved with concrete, asphalt or other impermeable material;

(ii) graded to an adequate drain or gutter; and

(iii) cleaned at least once daily when in use.

Region of/de Sudbury

Interoffice Correspondence

H:RMANBC...\\WPDATA\

February 20, 1998

MEMO TO: Building Inspection Staff
Building Permit Services Clerks

FROM: Guido Mazza, P.Eng.
Chief Building Official

SUBJECT: **Procedure Documentation**
Refreshment Vehicles/Chip Stands

Attached is a copy of modified procedures concerning the installation of refreshment vehicles/chip stands.

These procedures should serve to alleviate any confusion you may have had in the past as to when a building permit is required for this type of structure.

Should you have any concerns regarding these procedures, feel free to consult with me.

Guido Mazza, P.Eng.
Chief Building Official

Attach.

c.c. M. Tedeschi (FYI)

REGIONAL MUNICIPALITY OF SUDBURY
BUILDING SERVICES SECTION
PROCEDURE DOCUMENTATION

EFFECTIVE DATE: April 1, 1987	**NO. OF PAGES:** 2
REVISION DATE: February 19, 1998	**DEPARTMENT:** Planning and Development
PURSUANT TO POLICY: Directive from Director of Building Controls	**SECTION:** Building Services
	GROUP: Inspectors/Permit Control Group
	POSITION: Inspectors/Permit Control Clerks

APPROVAL OF REFRESHMENT VEHICLES/CHIP STANDS

When refreshment vehicle operators come in to apply for approval for their units it is important that they be provided with the most current and up-to-date information affecting their facility.

The following items are to be considered before authorizing the establishment of a refreshment vehicle:

1. A proposal should be supported by sufficient information to enable an inspector the opportunity to assess whether or not the refreshment vehicle complies with the zoning regulations. A drawing, showing the location of the refreshment vehicle and the surrounding buildings on the lot should be accurately described on a plot plan.

2. The use must satisfy the applicable zoning regulations.

3. The refreshment vehicles must **not** occupy parking spaces required by the buildings already on site.

4. Sufficient parking spaces must be provided to satisfy the zoning regulations determined by the size of the refreshment vehicle.

5. It must be established if a Site Plan Agreement currently affects the property and the refreshment vehicle is provided for in the agreement.

... 2/.

HISTORY:

These procedures were put in place by the Director of Building Controls in an inter-office memo to staff dated April 1, 1987. On December 30, 1991 these procedures were confirmed in another inter-office memo from the Director of Building Controls to Building Inspectors, the By-law Section and the Site Plan Control Section.

CROSS REFERENCES: - Inter-office memo dated December 30, 1991, including an inter-office memo dated April 1, 1987 from the Director of Building Controls to Building Inspectors, By-law Section and Site Plan Control Section.

DEPARTMENT HEAD	SECTION HEAD	PREPARED BY:
V.E. Lautenbach	G.A. Mazza, P.Eng.	I.S.Clarke, CPS, AMCT

6. The signs erected to advertise the refreshment vehicle activities and/or its menu, must satisfy the applicable zoning regulations.

7. The vehicle must be set back from the property lines to satisfy the current zoning regulations. February 19, 1998

8. All seating facilities connected with the refreshment vehicle must be shown on the drawing submitted.

9. The operator is to advise whether or not the refreshment vehicle is to be located at a single site or moved from place to place.

A Building Permit is only required if:

- structure or refreshment vehicle is directly connected to "hard services" such as sewer/water & hydro.

  Note that refreshment vehicles/chip stands obtaining power via an extension cord plug-in are not considered connected to a "hard service". If hydro is supplied through a "mast" connected to the vehicle or structure, it is to be considered "hard" connected. The vehicle or structure, if connected to "hard servicse", must be underpinned with cribbing and anchored to resist overturning. Details for such work can be provided from those in CSA Standard 240.10.1-94. Site Preparation, Foundation and Anchorage of Mobile Homes, Figure C-4 Typical Anchorage Systems and Figure B8 - Wood Crib Pier Foundation, copies attached.

- structure or refreshment vehicle is not on wheels and requires cribbing and anchoring

Any questions with respect to this procedure should be directed to the Chief Building Official.

FEES:

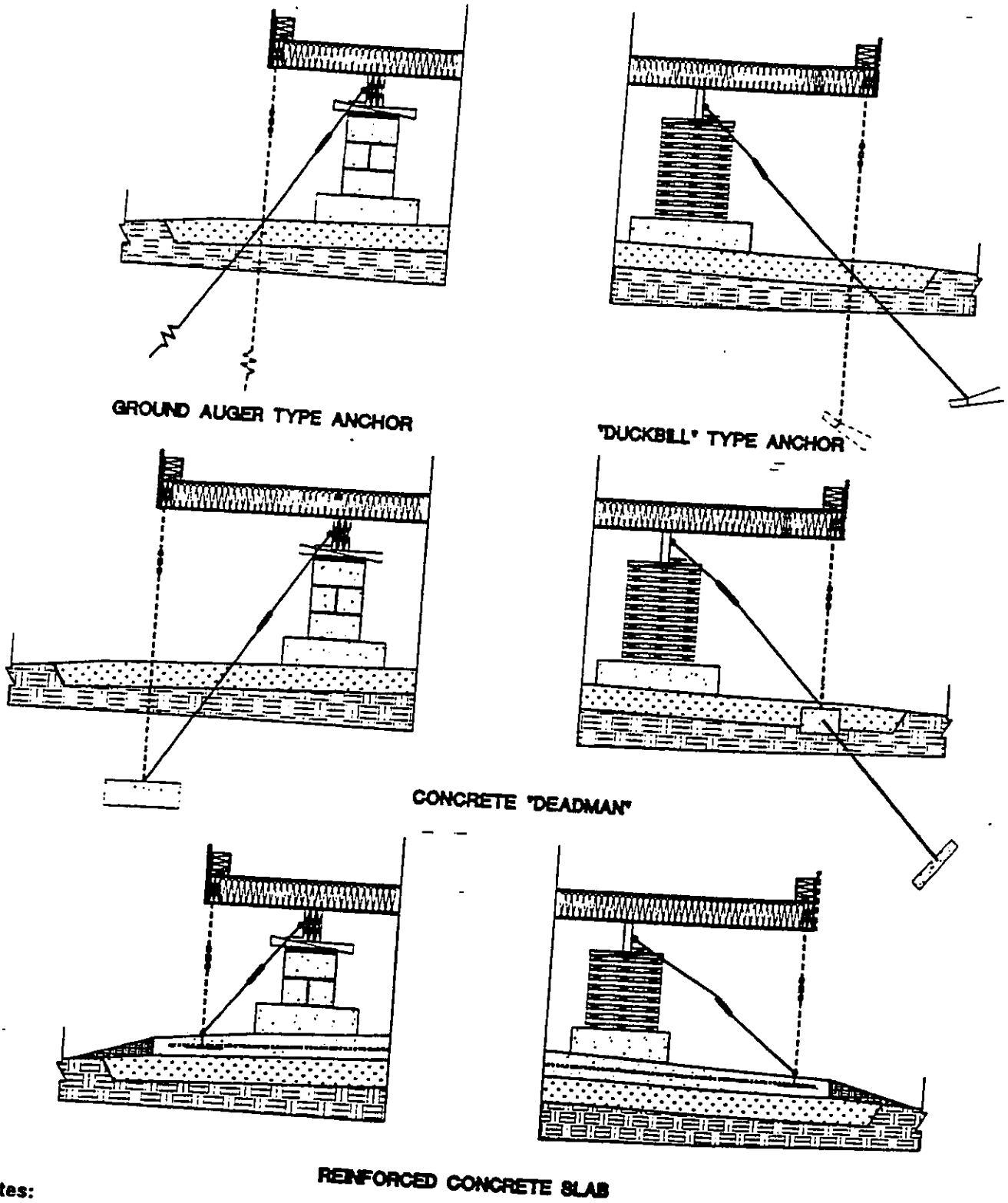

Notes:

(1) *Diagonal tiedowns are effective in limiting lateral sliding on the foundation piers.*

(2) *Vertical tiedowns, directly connected to the wall studs, provide the most effective resistance to uplift and overturning forces and should be considered for use at high wind load sites, particularly on the prevailing windward sides of the installation.*

Figure C4
Typical Anchorage Systems
(See Clause 5.)

122

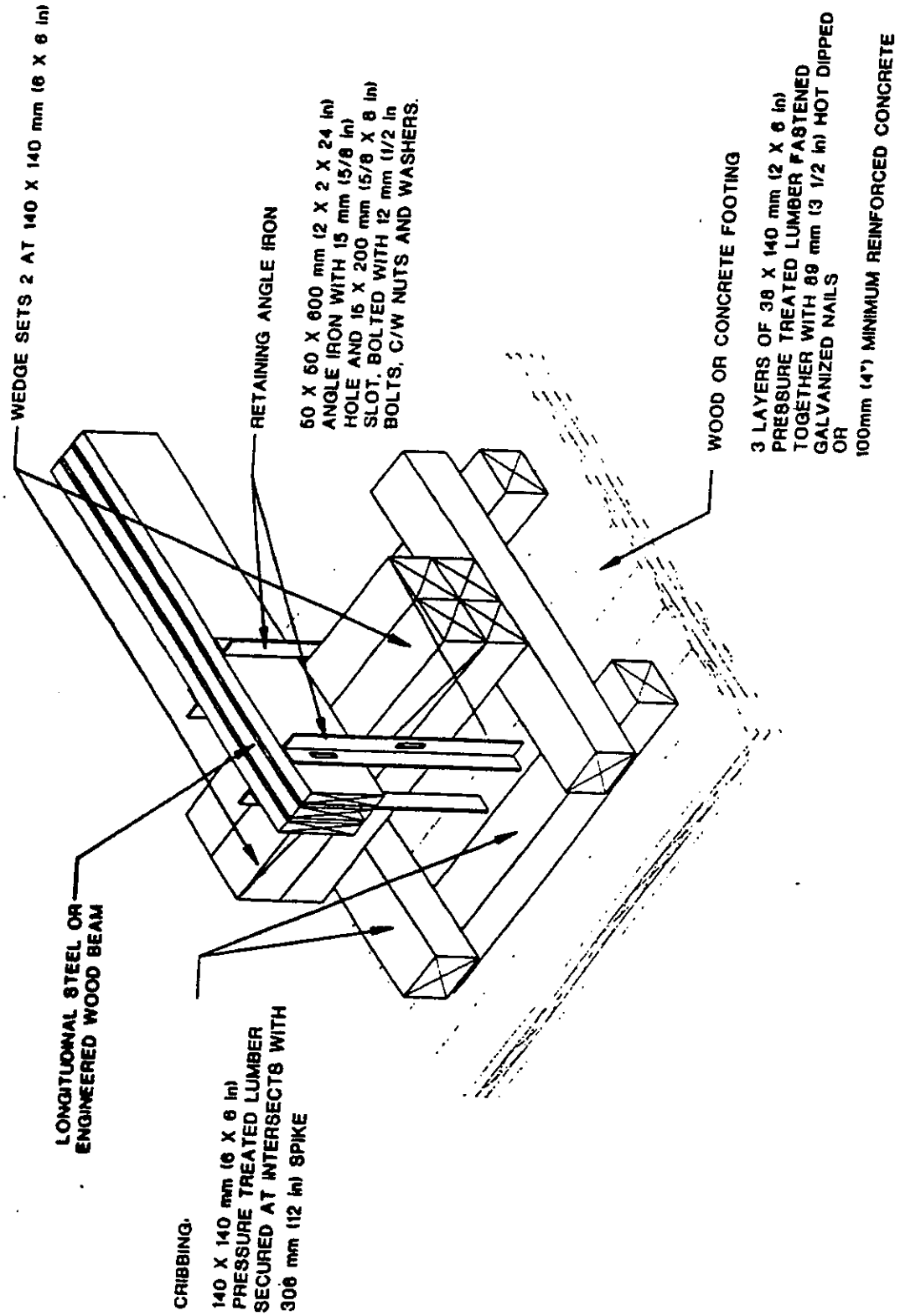

Figure B8
Wood Crib Pier Foundation

123

REGIONAL MUNICIPALITY OF SUDBURY
BUILDING SERVICES SECTION
PROCEDURE DOCUMENTATION

EFFECTIVE DATE: February 23, 1996	**NO. OF PAGES:** 2
REVISION DATE:	**DEPARTMENT:** Planning and Development
PURSUANT TO POLICY:	**SECTION:** Building Services
Day Nurseries Act	**GROUP:** Inspectors
Regulation 262, Section 4(1)(d) and (c)	**POSITION:** Inspector

DAY NURSERIES

1) The Day Nursery Licence Applicant requests an inspection and an approval letter from Building Controls and submits this letter when received from Building Controls to the Ministry of Community and Social Services.

2) A permit is required if there is construction or a change of use involved. Routine building inspections are scheduled by the applicant as required. Upon completion of the construction, the applicant requests an acceptance letter from Building Controls which is forwarded to him/her.

3) When no permit is required, Building Controls respond to a request to inspect received from the licence applicant. Building Controls inspects to verify that a permit is not required and that no changes have been made to the original construction.

4) When an inspection is requested and a permit is not required the applicant must submit to Building Controls a floor plan of the day nursery showing dimensions, exits, etc.

.../2.

HISTORY:

- Where there is construction or a change of use and a permit has been issued, routine inspections would be performed by the building inspector when requested by the contractor.

  Where no building permit is required Building Controls respond to a request to inspect received from the licence applicant. In this case Building Controls inspect to verify that a permit is not required and to check health and safety items.

CROSS REFERENCES:

?ARTMENT HEAD	SECTION HEAD	PREPARED BY
W.E. Lautenbach	G.A. Mazza, P.Eng.	W. Skyba

October 3, 2005

DAY NURSERIES - continued	**HISTORY** - continued

- 2 -

5) The following will be inspected by a building inspector whenever a request to inspect a day nursery is received:

a) exit facilities, travel distances to exits, means of egress

b) washroom facilities

c) fire equipment

d) guards and handrails

e) emergency lighting

6) When the building inspector does not approve the premises, a second inspection must be scheduled by the applicant.

7) When the building inspector does approve the premises, Building Controls prepares an approval letter for the applicant.

--0--

FEES: ~~$67.00~~ - for inspection $79.00
~~$33.00~~ - for acceptance letter $40.00
OR
The price of the building permit
$33.00 - for acceptance letter
All of the above mentioned fees are designated as revenue generated by the Building Services Section.

Alerie

LEGEND

258.258	ELEV. AT EXTERIOR OF HOUSE
[258.258]	MAIN FLOOR ELEV.
(258.258)	GARAGE ELEV.
258.258	PROPOSED ELEV.
258.258ex	EXISTING ELEV.

REGISTERED BUILDER TARION WARRANTY CORPORATION TARION

NORTHERN ONTARIO 2003 BUILDER OF THE YEAR
Large Volume Builder Category
Awarded by the Ontario New Home Warranty Program

SITE PLAN

SCALE 1:200

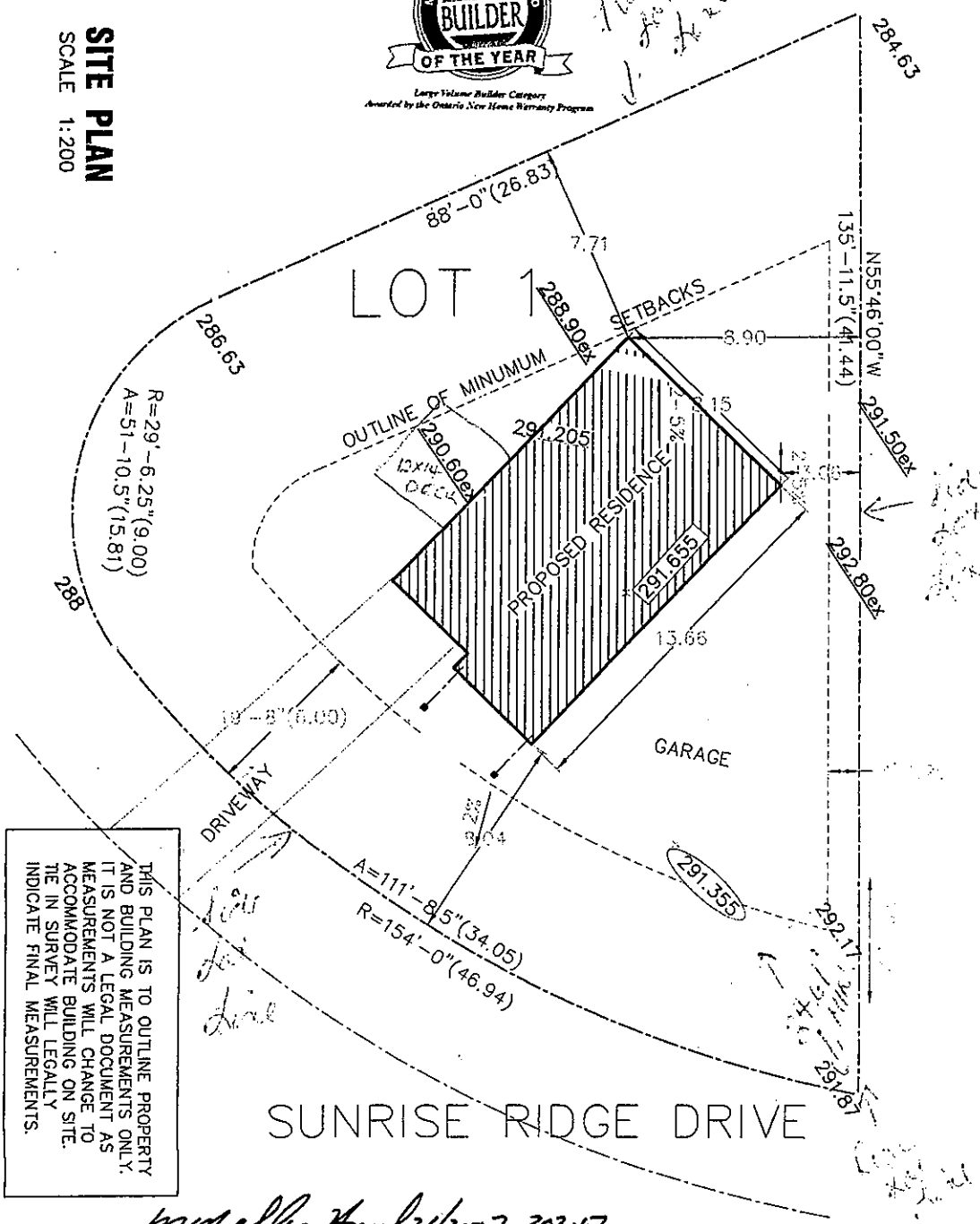

THIS PLAN IS TO OUTLINE PROPERTY AND BUILDING MEASUREMENTS ONLY. IT IS NOT A LEGAL DOCUMENT AS MEASUREMENTS WILL CHANGE TO ACCOMMODATE BUILDING ON SITE. TIE IN SURVEY WILL LEGALLY INDICATE FINAL MEASUREMENTS.

Michelle Hynd 26/2007 30247

SaDan DEVELOPMENTS LIMITED

PROJECT FOR:
LOT #1 PHASE I
SUNRISE RIDGE ESTATES SUBDIVISION
SAL DAN DEVELOPEMENTS

STRUCTURAL DESIGN IS BASED ON THE FULL INTERACTION OF ALL COMPONENT PARTS. NO PROVISIONS HAVE BEEN MADE FOR CONDITIONS OCCURING DURING CONSTRUCTION.

ALL INFORMATION ON THIS DRAWING IS THE PROPERTY OF MILLAR ENGINEERING CORP.

NOTES:

CONTRACTOR TO CHECK AND VARIFY ALL DIMENSIONS

TITLE: LOT 1 SITE PLAN/ LOT GRADING PLAN

DRAWN: PAUL

CHEK'D: MERV MILLAR P. ENG.

SCALE: 1:200

DATE: APRIL 15, 2007

CONTRACT: 07040

DRAWING NUM: LOT 1

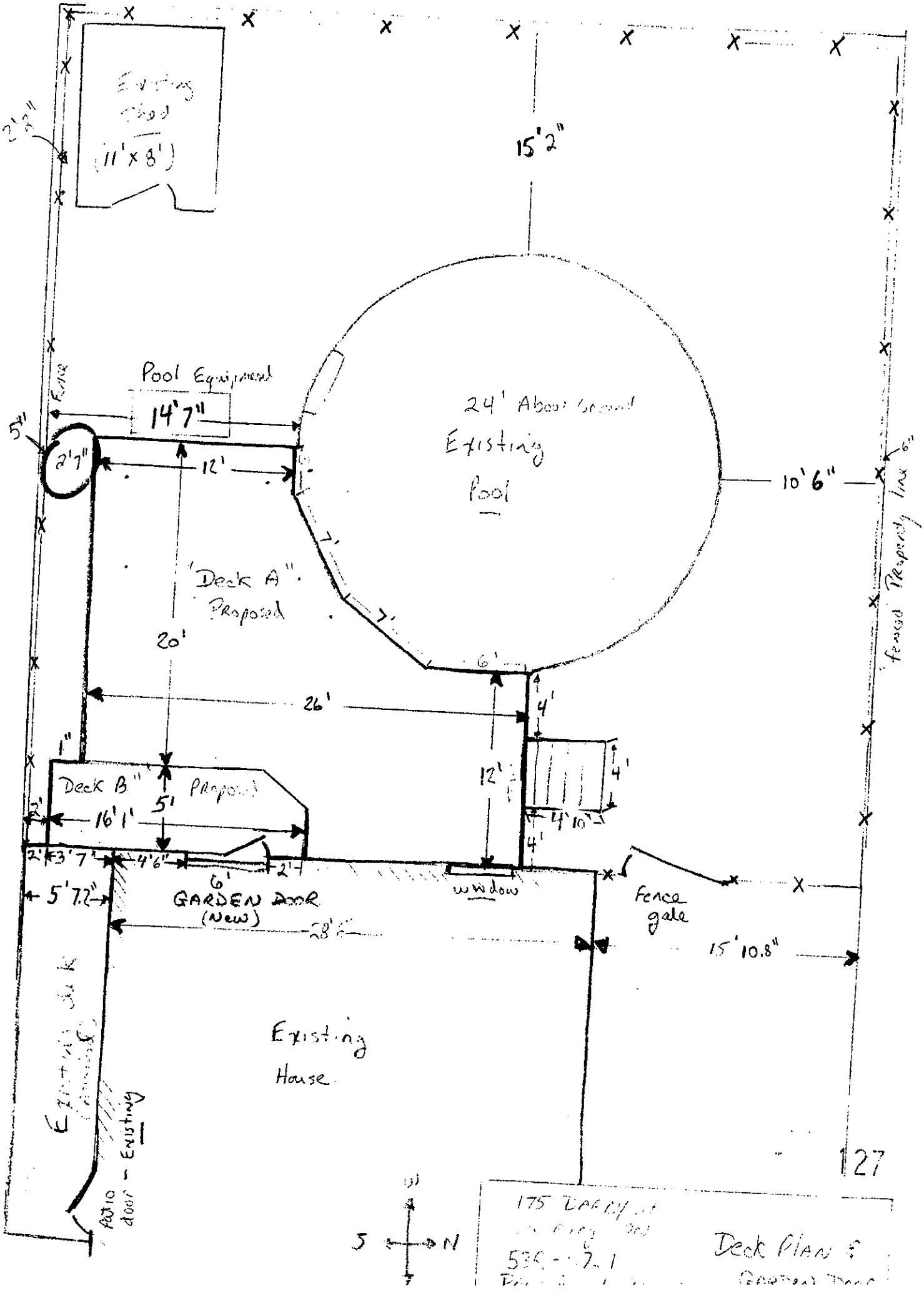
Existing Shed (11' x 8')
2'2"
15'2"
Pool Equipment
14'7"
5'
2'7"
12'
24' Above Ground Existing Pool
10'6"
6"
Fenced Property line
"Deck A" Proposed
20'
6'
26'
4'
1"
Deck B" Proposed
5'
12'
4'
4'10"
4'
2'
16'1"
2'
3'7"
4'6"
2'
6'
5'7.2"
GARDEN DOOR (New)
window
Fence gate
28'
15'10.8"
Existing House
Existing Deck
Patio door - Existing
S
N
175 Darcy
536-7-1
Deck Plan
127

675-1012

TURNING RADIUS.

ATT: ED PICCO

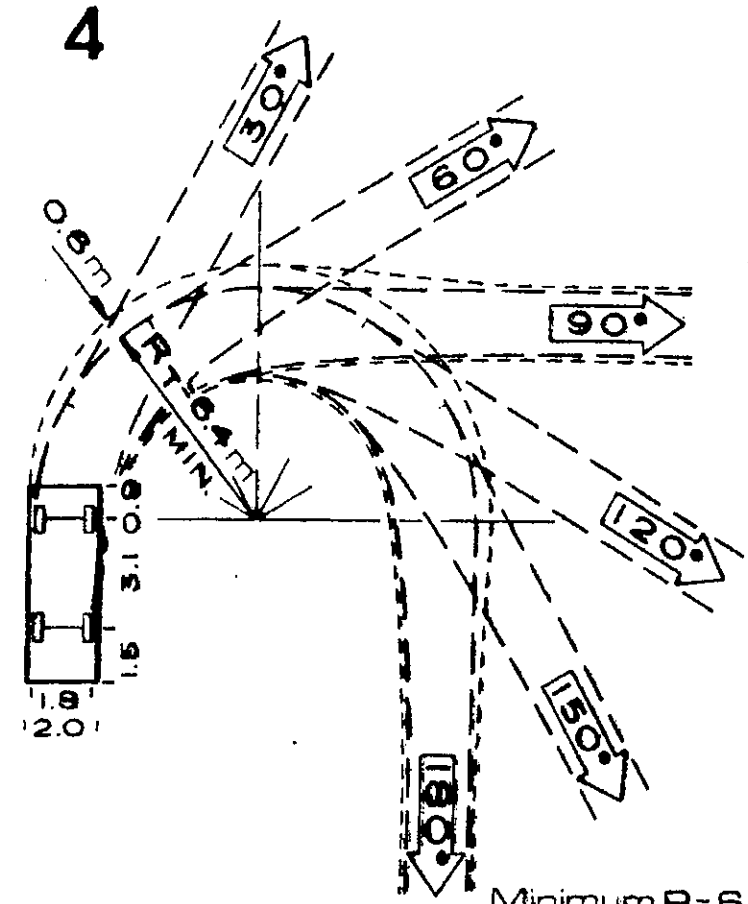

DEVELOPED FOR R.T.A.C. BY.
De Leuw Cather, Canada Ltd. C

Minimum R = 6.4 m
1:200 **Ps**

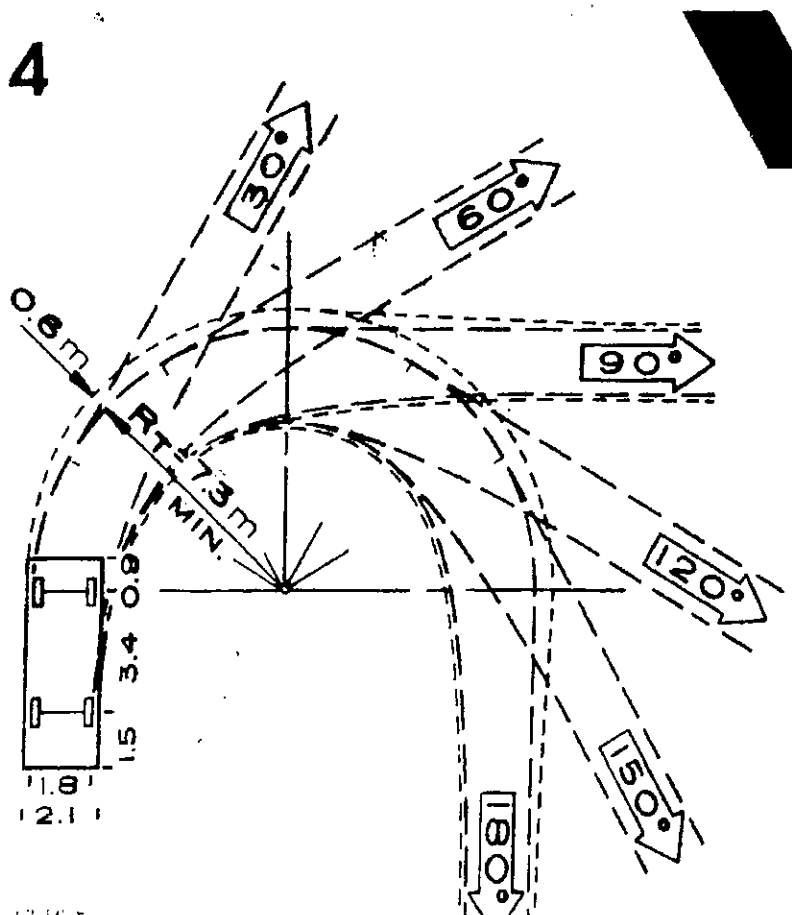

AASHTO DESIGN VEHICLE

Minimum R = 7.3 m **D**

Intertek ETL SEMKO

April 2, 2007

Francis Roma
Logix ICF Ltd.
Suite 327 – 801 Klahanie Drive
Port Moody, BC V3H 5K4

Dear Mr. Roma,

RE: Thermal Resistance of Logix ICF Wall System

Intertek Testing Services NA Ltd. (Intertek) has conducted a calculation to determine the thermal resistance of Logix ICF Wall System consisting of a 5.5-inch thick EPS panels, a 4-inch concrete core, ½-inch drywall and an inside air film. The individual values are reported in Table 1 below and totaled to obtain the thermal resistance of the complete system.

Table 1 – Thermal Resistance of Logix ICF Wall System

COMPONENT	DATA SOURCE	R-VALUE (m^2K/W)
Logix 5.5-inch EPS Panels	Intertek Test Report 3048347 dated October 14, 2003	4.01
4-inch Concrete Core (150 lbs/ft^3)	Model National Energy Code of Canada for Houses 1997	0.05
½-inch Drywall (one side)	Model National Energy Code of Canada for Houses 1997	0.08
Inside Air Film	Model National Energy Code of Canada for Houses 1997	0.12
	TOTAL:	**4.26 m^2K/W* 24.15 ft^2hF/Btu****

*R-value, as reported in Canada.
**R-value, as reported in the US.

If you have any questions, please do not hesitate to contact us at 604-520-3321.

INTERTEK TESTING SERVICES NA LTD.
Wamock Hersey

Prepared By: Matt Lansdowne
Matt Lansdowne, EIT
Engineer – Building Products

Reviewed By:
Kal Kooner, EIT
Team Leader – ES Canada

Intertek Testing Services NA Ltd.
1500 Brigantine Drive, Coquitlam, BC V3K 7C1 Canada
tel: 604-520-3321 fax: 604-524-9186 Home Page www.intertek-etlsemko.com

Sudbury Greater Grand

Interoffice Correspondence

September 5, 2006

TO: **BUILDING INSPECTORS**
PLANS EXAMINERS

FROM: **G. A. Mazza**

RE: **Amendments to the Ontario Building Code**
O.Reg. 422/06 & O.Reg. 423/06

Attached for your information is a copy of the above noted amendments to the Ontario Building Code which update applicable law and reflect changes to the Ontario Heritage Act.

GUIDO A. MAZZA, P. ENG.
DIRECTOR OF BUILDING SERVICES/
CHIEF BUILDING OFFICIAL

GAM/vk

Attachment

cc: R. Beaudry

Ministry of Municipal Affairs and Housing

Building and Development Branch
777 Bay Street, 2nd Floor
Toronto ON M5G 2E5
Telephone: (416)585-6666
Fax: (416)585-7531
www .obc.mah.gov.on.ca

Ministère de Affairs municipales et du Logement

Direction du bâtiment et de l'aménagement
777, rue Bay, 2 ième étage
Toronto ON M5G 2E5
Téléphone: (416)585-6666
Télécopiecer: (416)585-7531
www .obc.mah.gov.on.ca

Ontario

August 29, 2006

To: Chief Building Officials

I am writing to inform you that on August 29, 2006, O.Reg. 422/06 and O.Reg. 423/06 were filed amending the current and 2006 Building Code to update applicable law for the purposes of issuing a building permit or conditional permit.

Applicable law has been amended to reflect changes to the *Ontario Heritage Act* introduced through the *Stronger City of Toronto for a Stronger Ontario Act, 2006*. Editorial changes have also been made in order to harmonize applicable law with current provincial legislation and policies.

Applicable law under the Building Code will continue to be reviewed on an ongoing basis, and it is likely that further amendments will be proposed in the future in order to keep the list of applicable law current.

I have attached copies of O.Reg. 422/06 and O.Reg. 423/06 for your information. For further information, you may wish to visit the Building Code website at www.obc.mah.gov.on.ca.

If you have any questions regarding the regulations, please contact James Douglas, Manager, Code Development, Legislation and Appeals, Building and Development Branch at 416-585-7174.

Sincerely,

David Brezer
Director/A

Encl.

REGISTRAR OF REGULATIONS
Filed as O. Reg. 422/06
On
AUG 29 2006
Proposed source law publication dates:
e-Laws Aug 31/06
Ontario Gazette Sept 16/06

CONFIDENTIAL
Until filed with the
Registrar of Regulations

ONTARIO REGULATION

made under the

BUILDING CODE ACT, 1992

Amending O. Reg. 403/97

(Building Code)

Note: Ontario Regulation 403/97 has previously been amended. Those amendments are listed in the Table of Regulations – Legislative History Overview which can be found at www.e-Laws.gov.on.ca.

1. (1) Subclause 1.1.3.3. (1) (a) (xv.2) of Ontario Regulation 403/97 is revoked and the following substituted:

(xv.2) Subsection 30 (2) of the *Ontario Heritage Act* with respect to a consent of the council of a *municipality* to the alteration or *demolition* of a *building* where the council of the *municipality* has given a notice of intent to designate the *building* under subsection 29 (3) of that Act,

(2) Subclause 1.1.3.3. (1) (a) (xvii.2) of the Regulation is revoked and the following substituted:

(xvii.2) Subsection 34.7 (2) of the *Ontario Heritage Act* with respect to a consent of the Minister to the alteration or *demolition* of a *building* where the Minister has given a notice of intent to designate the *building* under section 34.6 of that Act,

(3) Clause 1.1.3.3. (1) (b) of the Regulation is amended by adding the following subclause:

(viii) Subsection 27 (3) of the *Ontario Heritage Act*,

(4) Subclause 1.1.3.3. (1) (b) (xii) of the Regulation is revoked.

2. Clause 2.4.1.3. (1) (e) of the Regulation is revoked and the following substituted:

(e) Subsection 27 (3), subsection 30 (2), sections 33, 34 and 34.5, subsection 34.7 (2) and sections 40.1 and 42 of the *Ontario Heritage Act*.

CONFIDENTIAL
Until filed with the
Registrar of Regulations

REGISTRAR OF REGULATIONS
Filed as O. Reg. 423/06
On
AUG 29 2006
Proposed source law publication dates:
e-Laws Aug 31/06
Ontario Gazette Sept 16/06

ONTARIO REGULATION

made under the

BUILDING CODE ACT, 1992

Amending O. Reg. 350/06

(Building Code)

Note: Ontario Regulation 350/06 has not previously been amended.

1. (1) Subclause 1.4.1.3. (1) (a) (xiv) of Division A of Ontario Regulation 350/06 is revoked and the following substituted:

(xiv) subsection 30 (2) of the *Ontario Heritage Act* with respect to a consent of the council of a *municipality* to the alteration or *demolition* of a *building* where the council of the *municipality* has given a notice of intent to designate the *building* under subsection 29 (3) of that Act,

(2) Subclause 1.4.1.3. (1) (a) (xviii) of Division A of the Regulation is revoked and the following substituted:

(xviii) subsection 34.7 (2) of the *Ontario Heritage Act* with respect to a consent of the Minister to the alteration or demolition of a *building* where the Minister has given a notice of intent to designate the *building* under section 34.6 of that Act,

(3) Clause 1.4.1.3. (1) (b) of Division A of the Regulation is amended by adding the following subclause:

(vi.1) subsection 27 (3) of the *Ontario Heritage Act*,

(4) Subclause 1.4.1.3. (1) (b) (ix) of Division A of the Regulation is revoked.

2. (1) Sentence 1.3.1.5. (1) of Division C of the Regulation is amended by adding the following clause:

(c.1) subsection 27 (3) of the *Ontario Heritage Act*,

(2) Clause 1.3.1.5. (1) (d) of Division C of the Regulation is revoked and the following substituted:

(d) subsection 30 (2) of the *Ontario Heritage Act* with respect to a consent of the council of a *municipality* to the alteration or *demolition* of a *building* where the council of the *municipality* has given a notice of intent to designate the *building* under subsection 29 (3) of that Act,

(3) Clause 1.3.1.5. (1) (h) of Division C of the Regulation is revoked and the following substituted:

(h) subsection 34.7 (2) of the *Ontario Heritage Act* with respect to a consent of the Minister to the alteration or *demolition* of a *building* where the Minister has given a notice of intent to designate the *building* under section 34.6 of that Act,

(h.1) by-laws made under section 40.1 of the *Ontario Heritage Act*,

3. This Regulation comes into force on December 31, 2006.

Polyurethane Foam Systems Inc.

440 Conestogo Road
Waterloo, Ontario N2L 4E2
Phone: 519 884-0688
Fax: 519 884-7300
Toll Free: 1-888-783-0751
www.polyurethanefoamsystems.com

Waterloo, Ontario, January 3, 2002

SUBJECT: WATER VAPOUR DIFFUSION OF POLARFOAM PF-7300

The permeability of a product is the speed in which the water passes through a homogeneous material. The 1995 NBC articles: 5.5.1.2 and 9.25.4 considers a material a vapour barrier when its rate of performance is lower than 1.05 Perm (60 ng/Pa s m2), according to the standard CAN/CGSB-51.33-M-89, (vapour barrier sheet, excluding polyethylene) for use in Building Construction.

To further investigate the Water Vapour Diffusion, Demilec Inc. requested a study by the National Research Council of Canada (report A-3136) in 1996. This study quantifies the permeance of wall assemblies using Polarfoam PF-7300.

25 mm of **Polarfoam PF-7300** sprayed on gypsum board = 68 ng/Pa*s*m² (1.18 Perm).
50 mm of **Polarfoam PF-7300** sprayed on gypsum board = 42 ng/Pa*s*m² (0.73 Perm).
75 mm of **Polarfoam PF-7300** sprayed on gypsum board = 30 ng/Pa*s*m² (0.53 Perm).

25 mm of **Polarfoam PF-7300** sprayed on concrete blocks = 36 ng/Pa*s*m² (0.64 Perm).
50 mm of **Polarfoam PF-7300** sprayed on concrete blocks = 28 ng/Pa*s*m² (0.50 Perm).
75 mm of **Polarfoam PF-7300** sprayed on concrete blocks = 24 ng/Pa*s*m² (0.42 Perm).

The permeance of the **Polarfoam PF-7300** system varies according to the thickness and to the type of substrate the foam is sprayed on. For example on a wood substrate we would expect the vapour permeance to fall between the values determined for concrete block and gypsum board based on substrate density.

To respond to the needs of building professionals, Demilec Inc. requested analysis by a recognized independent laboratory, AIR-INS Inc. on a typical wall composition. This composition includes 65 mm of the product **Polarfoam PF-7300** sprayed on gypsum board with no insulation inside, 152 mm steel studs and no additional vapour barrier. The conclusions are the same as the NRC results for this type of building and for the region in which it was built. It is not necessary to add a vapour barrier.

The National Building code article A-9.25.4.2.(2) precise: "Where low permeance foamed plastic is the sole of the thermal insulation....no additional vapour barrier is needed to control condensation...".

Finally the CCMC (Canadian Construction Materials Centre) report 12893-R Air Barrier Material refer to the same national building code articles and confirm that the **Polarfoam PF-7300** could qualify as the designated vapour barrier in the wall assembly.

For more details, or if you have any further questions or concerns, please do not hesitate to contact me at toll free 888 783-0751.

Dan Clayton,
President

136

BAKOR

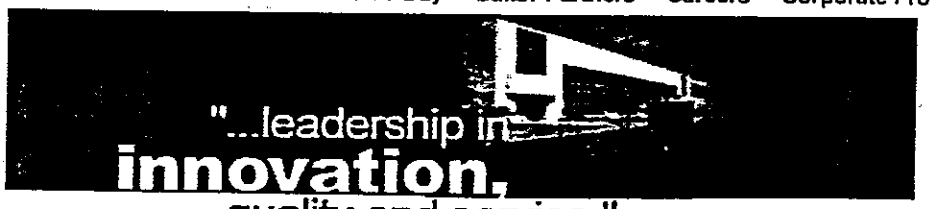

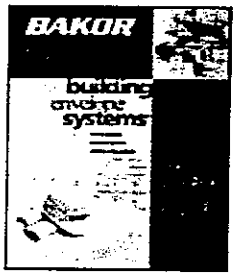

Click here

to download our building envelope systems brochure.

Bakor en Francais

US Website

Improving the Performance o Buildings and Homes

Bakor is considered a leader in the knowledge and development of air barrier, roofing systems and solutions. No other manufacturer can offer you a more div comprehensive list of air barrier, waterproofing and roofing products to suit you design requirements.

For over 60 years, **Bakor** has been at the forefront of industrial. commercial ar construction technologies.

Bakor now takes its expertise and solutions from commercial applications to re construction. Let our team of experts help you to improve the performance anc house with our proven products.

Building Envelope Systems®

The Building Envelope is essentially the "skin" of a building or home. The quali Envelope will determine how well a building will function and its life span.

The requirements of the Building Envelope will differ with the climate of the are insulation is necessary the following requirements have been identified by Dr. I the Canadian Building Digest - CBD48 (1963).

- control heat flow
- control air flow

- control water vapor flow
- control rain penetration
- control light, solar and other radiation
- control noise
- control fire
- provide strength and rigidity
- be durable
- be aesthetically pleasing
- be economical

Examination of building problems clearly indicates that the requirements of the most in need of solutions are air flow, water vapor flow, rain penetration, and d

Building Envelope failures are evident as rain penetration, high energy costs. e of building components, and Sick Building Syndrome/Indoor Air Quality (IAQ) p

At **Bakor** we understand the principles of providing integrated systems, with ou products. to ensure superior building performance. This translates into Bakor A Waterproofing and Roofing systems and the expertise to integrate these syste.

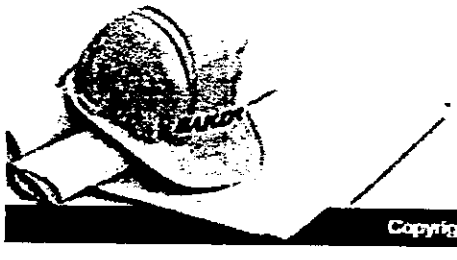

	and Insulation Adhesive	
AirBloc 21FR	Fire Resistive Air and Vapour Barrier Membrane and Insulation Adhesive	
AirBloc 21S	Spray Applied Air and Vapour Barrier Membrane and Insulation Adhesive	
AirBloc 32	Elastomeric Emulsion Air and Vapour Barrier Membrane	
Blueskin SA	Self-Adhesive Air and Vapour Barrier Membrane	
Blueskin SA LT	Low Temperature Self-Adhesive Air and Vapour Barrier Membrane	
Blueskin TG	Torch Grade Air and Vapour Barrier Membrane	
Blueskin TWF	Self-Adhesive Thru-Wall Flashing Membrane	

Air Barrier Primers and Accessories

230-21	Rigid Insulation Adhesive & Vapour Barrier	
910-01	Penetrating Asphalt Primer	
910-02	Non-Penetrating Asphalt Primer	
930-18	Primer for Polymer Modified Membranes	
990-06 Yellow Jacket	Reinforcement Fabric	
Aquatac Primer	Rubberized Emulsion Primer for Self-Adhesive Membranes	
Blueskin Primer	Primer for Self-Adhesive Membranes	
Blueskin Primer Ultra	Aerosol Primer for Self-Adhesive Membranes	
Blueskin TWF	Self-Adhesive Thru-Wall Flashing Membrane	
Polybitume 570-05	Polymer Modified Sealing Compound	

Vapour Bloc Vapour Barriers

Vapor-Bloc 610-14	Vapour Barrier Protective Coating	

waterproofing and damproofir

Hot Applied Rubberized Asphalt Waterproofing Membrane

790-11	Hot Applied Rubberized Asphalt Membrane	DATA SHEETS
910-01	Penetrating Asphalt Primer	DATA SHEETS
930-18	Polymer Modified Asphalt Primer	DATA SHEETS
990-25	Elastomeric Flashing Sheet	DATA SHEETS
Asphaltic Protection Board		DATA SHEETS
NP180gT4	Reinforcing Flashing Sheet	DATA SHEETS
NP180p/p	Reinforcing Sheet	DATA SHEETS
NP180s/s	Reinforcing Sheet	DATA SHEETS
Polyester fabric	Polyester Reinforcing Sheet	DATA SHEETS

Self-Adhered Waterproofing Membrane

Aquatac Primer	Rubberized Emulsion Primer for Self-Adhesive Membranes	DATA SHEETS
Blueskin Primer	Primer for Self-Adhesive Membranes	DATA SHEETS
Blueskin WP200	Self-Adhered Waterproofing Membrane	DATA SHEETS
Hi-Tac	Adhesive and Primer for Self-Adhered Membrane	DATA SHEETS
Polybitume 570-05	Polymer Modified Sealing Compound	DATA SHEETS

Elastomeric Liquid Applied Waterproofing Membranes

Aqua-Bloc 720-33	Elastomeric Asphalt Emulsion Waterproofing Membrane	DATA SHEETS
Aqua-Bloc 720-38	Elastomeric Asphalt Emulsion Waterproofing Membrane	DATA SHEETS
Aqua-Bloc 770-06	Elastomeric Waterproofing Membrane	DATA SHEETS

Cold Applied Damproofing and Waterproofing

700-01	Damproofing and Waterproofing Asphalt Emulsion	DATA SHEETS
710-07	Damproofing Foundation Coating	DATA SHEETS
710-11	Damproofing and Waterproofing Asphalt Coating	DATA SHEETS
910-01	Penetrating Asphalt Primer	DATA SHEETS
990-06 Yellow Jacket	Reinforcement Fabric	DATA SHEETS

Thermofused Waterproofing Systems

930-18	Primer for Polymer Modified Membranes	DATA SHEETS
Blueskin TG	Thermofusible Grade Waterproofing Membrane	DATA SHEETS
NP180p/p	Thermofusible Grade	DATA SHEETS

	Waterproofing Membrane	
Thermoseal	Thermofusible Grade Waterproofing Membrane	

Waterproofing Accessories

230-21	Rigid Insulation Adhesive	
910-01	Penetrating Asphalt Primer	
930-18	Polymer Modified Primer	
990-06 Yellow Jacket	Reinforcement Fabric	
990-31	Polypropylene Protection Board	
Asphaltic Protection Board		
DB 2000	Prefabricated Drainage Composites	
DB 6000	Prefabricated Drainage Composites	
DB 6200	Prefabricated Drainage Composites	
DB 9000	Prefabricated Drainage Composites	
FlamGuard	Self-Adhesive Roofing Tape	
Polyester fabric	Polyester Reinforcement Fabric	
QuickDry	Aerosol Asphalt Primer	

roofing

Self-Adhered Roofing Underlayments and Membranes

Blueskin PE 200 HT	High Temperature Self-Adhered Roofing Underlayment	
Blueskin RF 200	Premium Self-Adhered Roofing Underlayment	
Eaveguard	Shingle Underlayment	
FlamGuard	Self-Adhesive Roofing Tape	
Permaseal FG	Self-Adhered Roofing Underlayment	
VaporBloc SA	Self-Adhered Vapour Barrier Membrane	

Self-Adhered Roofing Membrane Systems

Aquaprime	Rubberized Emulsion Primer for Self-Adhesive Membranes	
Aquatac Primer	Rubberized Emulsion Primer for	

	Self-Adhesive Membranes	
Bluebase	Self-Adhesive Base Sheet	
Blueskin Primer	Primer for Self-Adhesive Membranes	
Blueskin Primer Ultra	Aerosol Primer for Self-Adhesive Membranes	
Low Slope One Ply	SBS Self-Adhered Granulated Roofing Membrane	
Low Slope Two Ply	SBS Self-Adhered Granulated Roofing Membrane	
Polybitume 570-05	Polymer Modified Sealing Compound	
SA Cap	Self-Adhesive Cap Sheet	

Hot Applied Rubberized Asphalt Roofing Membrane

790-11	Hot Applied Rubberized Asphalt Membrane	
910-01	Penetrating Asphalt Primer	
930-18	Polymer Modified Asphalt Primer	
990-25	Elastomeric Flashing Sheet	
NP180gT4	Reinforcing Flashing Sheet	
NP180p/p	Reinforcing Sheet	
NP180s/s	Reinforcing Sheet	
Polyfester fabric	Polyester Reinforcing Sheet	

modifiedPLUS - Cold Applied. Torch or Mop Applied SBS Roofir

MB Flashing 880-11	Flashing Adhesive - Non-Flammable	
MBA Gold	Elastomeric Modified Bitumen Adhesive	
modifiedPLUS G100 Base Sheets	SBS Glass Base Sheets -Self-Adhered, Torch, Mop, and Cold Adhesive Grades	
modifiedPLUS NP180 Base Sheets	SBS Polyester Base Sheets -Self-Adhered, Torch, Mop, and Cold Adhesive Grades	
modifiedPLUS NP180 Cap Sheets	SBS Polyester Cap Sheets -Torch, Mop, and Cold Adhesive Grades	
modifiedPLUS NP180 FR Cap Sheets	SBS Polyester Cap Sheets -Torch, Mop, and Cold Adhesive Fire Resistive Grades	
modifiedPLUS NP250 Cap Sheets	SBS Polyester Cap Sheets -Torch, Mop, and Cold Adhesive Grades	
modifiedPLUS NP250 FR Cap Sheets	SBS Polyester Cap Sheets -Torch, Mop, and Cold Adhesive Fire Resistive Grades	
Re-Cover Board	Asphaltic Protection Board for Roofing Applications	

SEBS Kettle Modified Roofing Asphalt

990-26	Elastomeric Reinforced Flashing Sheet	DATA SHEETS
SEBS 890-12	Kettle Modified Rubberized Asphalt	DATA SHEETS
SEBS 890-12 LT	Low Temperature Kettle Modified Rubberized Asphalt	DATA SHEETS

Adhesives for Roofing Applications

830-05	Fire Resistive Roof and Insulation Adhesive	DATA SHEETS
Thermostik 830-22A	Roof Insulation Adhesive	DATA SHEETS
Thermostik 840-10	Internal Setting Roofing Adhesive	DATA SHEETS
Thermostik 860-01	Moisture Curing, Non Flammable Roof Insulation Adhesive	DATA SHEETS
Thermostik 880-33	Non-Flammable Roof Insulation Adhesive	DATA SHEETS
Vapor-Bloc	Fire Resistive Roof Adhesive	DATA SHEETS

Adhesives for Membranes

810-10	Cold Process Roof Adhesive	DATA SHEETS
MB Flashing 880-11	Flashing Adhesive - Non-Flammable	DATA SHEETS
MBA Gold	Elastomeric Modified Bitumen Adhesive	DATA SHEETS

Roofing Maintenance Products - Primers

900-34	Rubberized Asphalt Emulsion Primer	DATA SHEETS
910-01	Penetrating Asphalt Primer	DATA SHEETS
910-02	Non-Penetrating Asphalt Primer	DATA SHEETS
930-18	Primer for Polymer Modified Membranes	DATA SHEETS
930-38	Non-Flammable Primer for Polymer Modified Membranes	DATA SHEETS
Aquaprime	Rubberized Emulsion Primer for Self-Adhesive Membranes	DATA SHEETS
Aquatac Primer	Rubberized Emulsion Primer for Self-Adhesive Membranes	DATA SHEETS
Blueskin Primer	Primer for Self-Adhesive Membranes	DATA SHEETS
Blueskin Primer Ultra	Aerosol Primer for Self-Adhesive Membranes	DATA SHEETS
Quick Dry	Aerosol Asphalt Primer	DATA SHEETS

Roofing Maintenance Products - Cements

810-20	Plastic Roofing Cement	DATA SHEETS
810-21	Wet or Dry Plastic Roofing Cement	DATA SHEETS
810-47	Extreme Weather Rubberized Flashing and Sealing Compound	DATA SHEETS

990-06 Yellow Jacket	Reinforcement Fabric	
ClearPatch	Clear Roof Sealant	
Polybitume 570-05	Polymer Modified Sealing Compound	

Roofing Maintenance Products - Coatings

800-13	Asphalt Emulsion Roof Coating	
810-07	Non-Fibered Asphalt Roof and Foundation Coating	
810-09	Fibrated Asphalt Roof Coating	
810-14	Heavy Duty Asphalt Roof Coating	
810-18	Aluminum Asphalt Roof Coating	
860-09	Aluminum Roof Paint	
870-07	Elastomeric Roof Sealant	
990-06 Yellow Jacket	Reinforcement Fabric	
Metalshield	Elastomeric Roof Coating	
Solarflex	White Elastomeric Roof Coating	

Roofing Maintenance Products - Resturants

810-55	Asphalt Roof Resaturant	
810-56	Premium Grade Asphalt Roof Resaturant	
Polysaturant	Elastomeric Roof Resaturant	

HVAC coatings and adhesives

Adhesives for Insulation

200-32	Rubber Asphalt Adhesive	
200-38	Non-Flammable Insulation Adhesive- Fast Setting	
220-05	Non-Flammable Water Based Insulation Adhesive	
230-06	Adhesive and Lap Sealer	
230-21	Rigid Insulation Adhesive and Vapour Barrier	
230-38	Fire Resistive Adhesive	
830-05	Fire Resistive Roof and Insulation Adhesive	
Blueskin Primer Ultra	Aerosol Insulation Adhesive	

Insulation Coatings

100-14	Fibrated Emulsion Insulation Coating	
110-14	Heavy Duty Vapour Barrier Coating	
120-09	Heavy Duty Fire Resistive Lagging Coating	
120-10	Fire Resistive Polymeric Emulsion Weather Barrier Coating	
120-18	Fire Resistive Lagging Coating	
120-19	Fire Resistive Coating and Asbestos Encapsulant	
120-20	Non-Flammable Asbestos Removal Agent and Post Removal Sealer	
130-12	Fire Resistive Vinyl Vapour Barrier	
810-18	Aluminum Insulation Coating	
860-09	Aluminum Paint	

High Velocity Duct Sealers (HVDS)

530-09	Fire Resistive High Velocity Duct Sealer	
Duck-Seal	Polymeric High Velocity Duct Sealer	

Self-Adhered Weatherproofing Membrane

Foilskin	Self-Adhered Weather Barrier Membrane	
Thermoskin	White, UV Resistant Self-Adhered Weather Barrier	

Primers

410-02	Bituminous Metal Paint	
910-01	Penetrating Asphalt Primer	

BAKOR

TECHNICAL DATA SHEET

Blueskin® WP 200

Self-Adhesive Waterproofing Membrane

Physical Properties

-Colour	Blue	-Minimum Puncture Resistance – Membrane (ASTM E154)	222 N/m
-Thickness	1.5 mm (60 mils)	-Flexibility at –40°C (ASTM D1970)	Pass
-Application Temp	-5°C and above	-Water Vapour Transmission (ASTM E96)	1.6ng/Pa.s.m^2 (0.02 perms)
-Elongation (ASTM D412)	300% (To ultimate failure of rubberized asphalt)	-Lap Peel Strength @ 5°C (ASTM D1876)	880 N/m
-Tensile Strength (Membrane) ASTM D412 – modified	2.24 MPa	-Hydrostatic Head (ASTM D5385)	70 m of water
-Tensile Strength (Film) ASTM D882	34.5 MPa	-Moisture Absorption (ASTM D570-81)	0.2% maximum
-Peel Strength (ASTM D903)	1576 N/m		
-Crack cycling @ -32°C 100 cycles (ASTM D836)	Unaffected		

Packaging

-Thickness	1.5 mm (60 mils)	-Gross Coverage 914 mm (36")	18.6 m^2 (200 ft^2)
-Roll Length	20.3 m (66.7 ft.)	-Net Coverage* 914 mm (36")	17.3 m^2 (186 ft^2)
-Roll Width	914 mm (36")	*Based on 65 mm laps both sides and end laps.	
-Top Surface	Blue cross-laminated polyethylene (HDPE)		
-Bottom Surface	Siliconized Release Film		

Description

Blueskin® WP 200 is a self-adhering composite membrane consisting of an SBS rubberized asphalt compound which is integrally laminated to a blue, high density cross-laminated polyethylene film. The membrane is specifically designed to be self-adhered to a prepared substrate providing a high performance waterproofing barrier.

Features

-SBS membrane flexible at low temperatures
-Fully adhered systems prevents lateral water movement
-No flame required
-Factory controlled thickness
-Negligible odour during application

Uses

Blueskin® WP 200 is designed for use as a self-adhered sheet waterproofing membrane. Its principal application is on concrete foundation walls, plaza decks, tunnels, and parking decks in both vertical and horizontal orientations. **Blueskin® WP 200** is an ideal membrane for use in interior applications such as mechanical rooms, laboratories and wet-rooms.

Limitations

Non-resistant to oils and solvents. Not designed for use in direct contact with potable water or permanent exposure and must be covered to prevent damage from sunlight. Good practice calls for the membrane to be covered immediately following application. Refer to minimum cure time requirements of sealant and mastics prior to applying polystyrene insulation. Use **Aqua-Bloc® 720-38** Rubber Asphalt Emulsion with Polystyrene form foundations. Do not use in contact with flexible PVC/vinyl products.

Bakor Inc., 375 Pendant Dr., Mississauga, ON L5T 2W9 Tel: 1-800-387-9598 Fax: 1-877-890-4866

Storage

Store on original pallets or elevated platform. Protect from weather or store in an enclosed area below 49°C.

Surface Preparation

Acceptable substrates are cast-in-place concrete, precast concrete, wood, concrete block, and polystyrene insulation form foundations. Parging of concrete blocks is not required. All surfaces to receive **Blueskin® WP 200** must be clean of oil, dust and excess mortar. Concrete surfaces must be smooth and without large voids, spalled areas or sharp protrusions. Concrete must be cured to a minimum of 7 days and must be dry and free from frost before **Blueskin® WP 200** is applied. Structural lightweight concrete must be cured 14 days. Where curing compounds are used they must be clear resin based, without oil, wax or pigments. Prime substrate using **Aquatac™** or **Hi-Tac™** applied by spray or roller at a rate of 7 m²/litre (300ft²/3.78L can) and allow to dry thoroughly before applying **Blueskin® WP 200**. Primed surfaces not covered by membrane during the same working day must be reprimed.

Application

Material should be conditioned at room temperature for ease of application.

Refer to **Blueskin® WP 200** Guide Specification for detailed application information. ***Where polystyrene foundation forms are used, use Aqua-Bloc® 720-38 in lieu of POLYBITUME® 570-05.***

Joint and Crack Treatment: All cracks in concrete 1.5 mm to 3 mm wide are to be pre-treated with a 1.5 mm (60 mil) coating of **POLYBITUME® 570-05** 50 mm wide centered on the crack. Alternately, apply a 150 mm wide strip of **Blueskin® WP 200** centered over crack. Provide 75 mm end laps. Horizontal to vertical inside corner transition areas are to be pre-treated with **POLYBITUME® 570-05** fillet extending 19 mm vertically and horizontally from the corner. Apply a minimum 225 mm strip of **Blueskin® WP 200** membrane centered at the joint. All outside corners are to be pre-treated with a minimum of 225 mm strip of **Blueskin® WP 200** membrane centered at the joint. Drains: At drains, apply waterproofing membrane collar centered on drain and extend 150 mm beyond flange onto deck. Apply field membrane in full width centered over drain. Apply clamping ring in a 1.5 mm (60 mil) bed of **POLYBITUME® 570-05** mastic. Projections: Extend **Blueskin® WP 200** membrane tight to projection and seal with **POLYBITUME® 570-05** liquid membrane extending 50 mm along projection and 50 mm onto **Blueskin® WP 200** membrane.

Vertical Applications: Apply **Blueskin® WP 200** waterproofing membrane to prepared substrate in lengths of 2400 mm or less. Provide 65 mm laps at both sides and ends. Position for alignment and remove protective film. Press firmly into place. Promptly roll all laps with a counter top roller to effect seal. If more than one length is required on a vertical surface, apply a shingle fashion. Terminate membrane using **POLYBITUME® 570-05** or termination bar, reglet or counter flashing as indicated. Refer to manufacturers standard details. All laps within 300 mm of 90° change in plane are to be sealed with **POLYBITUME® 570-05.** Horizontal Applications: Apply **Blueskin® WP 200** waterproofing membrane to prepared substrate beginning at the low point of the surface and working to the high point in a shingle fashion. Provide 65 mm side and end laps. Roll membrane immediately over entire surface to effect seal. At all terminations and T-joints, seal laps using **POLYBITUME® 570-05.** All laps within 300 mm of a 90° change in plane are to be sealed with **POLYBITUME® 570-05.**

Protection of Membrane

It is recommended to protect **Blueskin® WP 200** in both horizontal and vertical areas. **990-31 Protection Board** may be used for most applications. **Asphaltic Protection Board** can also be used for additional protection.<>

From: Richard Beaudry
To: Alfio Mazzuchin; Andre Guillot; Bill McCaffrey; Ed Picco; John Preston; Markku Makitalo; Rick Vincent; Sherri Budgell; Tony Pileggi
Date: 9/5/2006 4:16:36 PM
Subject: Re; Rinnai Tankless Water Heaters

To Staff,

The above captioned water heaters do not require ant-scalding devices, as they cannot be altered to supply more than 120 degrees F, or 49 degrees C.

The T-KD20 water heater can be altered to supply up to 176F thru the use of dip switches and therefor would require a anti-scalding device.

These are the only brands of tankless water heaters which we have info on.
If further info is required please feel free to contact Alfio or myself.

Thank You.

Richard.

CC: Guido Mazza

ONTARIO BUILDING OFFICIALS ASSOCIATION

May 31, 2007

Subject: Court Decision on PEO Challenge

On May 17th, the Divisional Court of the Ontario Superior Court of Justice handed down its decision on the application by the Association of Professional Engineers of Ontario, that was heard in October 2006, which challenged the validity of certain recent amendments to the Building Code. In those hearings, the Ontario Association of Architects was granted intervener status.

The full 'decision' is available from a link on OBOA's website. The order of the Court is to follow, but at this time has not been issued.

The Court granted the following four declarations (Decision Para. 77):

1. Article 2.3.1.1 of the Building Code is not authorized by s. 34 (1) 10 of the Building Code Act and is invalid to the extent that it purports to allocate responsibility for designs between professional engineers and architects.
2. Article 2.3.1.1 (4) of the Building Code is not authorized by s. 34 of the Building Code Act and is invalid.
3. Clause 1.1 (1) (c), subsection 1.1 (2), clause 8 (2) (c), and subsections 15 (5) to (7) of the Building Code Act conflict with the exclusive regulatory jurisdiction of the PEO and do not apply to any holder of any licence or certificate issued under the *Professional Engineers Act.*
4. Article 2.17 of the Building Code conflicts with the exclusive regulatory jurisdiction of the PEO and does not apply to any holder of any licence or certificate issued under the *Professional Engineers Act.*

Ministry of Municipal Affairs and Housing have indicated that they will be issuing a 'CodeNews' in the near future as well as providing guidance through the 'Question and Answers' section of the Ministry's website. I would encourage members to direct their queries through the Ministry website so that Ministry staff can identify common concerns.

OBOA will continue to dialogue with the PEO, the OAA and MMAH to provide information on this matter so that Chief Building Officials, their legal advisors and their staff can make the best possible choices relating to this Decision.

Yours truly,

J.T. (Terry) Hewitson, CBCO

President
Ontario Building Officials Association

200 Marycroft Avenue, Unit 8 Woodbridge, Ontario L4L 5X5 • Tel: (905) 264-1662 • Fax: (905) 264-7609
www.oboa.on.ca

Ministry of
Municipal Affairs
and Housing

Ministère des
Affaires municipales
et du Logement

Ontario

Building & Development Branch
777 Bay Street, 2nd Floor
Toronto, Ontario M5G 2E5

January 25, 2006

Branch Opinion

OBC Clauses 2.17.4.1.(3)(l) and 2.17.5.1.(2)(h)
Exemption from registration and qualification for design activities relating to pre-engineered wood elements of a building.

Question:

What factors should I consider when evaluating whether the design of pre-engineered wood trusses or engineered wood products qualify for the designer registration/qualification exemptions under Clauses 2.17.4.1.(3)(l) and 2.17.5.1.(2)(h) of the Building Code?

References:

Building Code

2.17.4.1. General

....

(3) A person is exempt from the requirement to comply with the qualification in Sentence (1) if the person's *design activities* relate only to

....

(l) *construction* of **pre-engineered elements** of a *building* provided that the design of the elements is carried out by a person **competent in the specific discipline appropriate to the circumstances. (Emphasis added.)**

....

2.17.5.1. General

....

(2) A person is exempt from the requirement to comply with the qualifications in Sentence (1) if his or her *design activities* relate only to

....

(h) *construction* of **pre-engineered elements** of a *building* provided that the design of the elements is carried out by a person **competent in the specific discipline appropriate to the circumstances. (Emphasis added.)**

....

Description:

Wood Trusses

Wood trusses are typically fabricated from visually graded and machine stress-rated lumber connected by proprietary metal truss plates and are used in floor and roof applications. Wood trusses are widely used in single and multi-family residential, institutional, agricultural and commercial construction.

Engineered Wood Products

Engineered wood elements include products such as laminated veneer lumber (LVL), parallel strand lumber (PSL), laminated strand lumber (LSL), oriented strand lumber (OSL), oriented strand board (OSB) and prefabricated wood I-joists. These products, collectively referred to as structural composite lumber (SCL) in engineering literature, are available in various thicknesses and widths and used in various applications including headers and beams, flanges for prefabricated wood I-joists, or for other specific uses.

Note: see attachment for a more detailed description of wood trusses and engineered wood products.

Pre-engineered Element Exemption:

Subsection 15.11-(5) of the *Building Code Act, 1992* (BCA) requires that "persons that prepare a design or give other information or opinion concerning whether a building or part of a building complies with the Building Code" be qualified where "the design information or opinion is to be submitted to a chief building official in connection with ... an application for a permit." Where the Principal Authority does not require plans or specifications for certain construction activities to accompany permit applications, these activities are not subject to the designer qualification requirements of the BCA **[See Branch Opinion BCA 7(b) and 15.11-(5) and (6), dated April 13, 2005]**. Many municipalities choose to not require plans for pre-engineered elements, including wood trusses or engineered wood products. As such, the activities associated with the selection and specification of these products would not be subject to the designer qualification requirements of the BCA.

However, where a municipality chooses to ask for plans and specifications for pre-engineered elements, including wood trusses and engineered wood products, Clauses 2.17.4.1.(3)(l) and 2.17.5.1.(2)(h) exempt certain designers of pre-engineered building elements from registration/qualification.

Clauses 2.17.4.1.(3)(l) and 2.17.5.1.(2)(h) contain three implied tests which must be met before an exemption is permitted.

Words not defined in the Building Code are given their ordinary meaning and common usage including any meanings of the trade or profession in which they are used (Article 1.1.3.1.).

> **Pre-engineered elements** is taken to mean sections or parts of a building that are produced or manufactured in a standardized way prior to their assembly on site.

Person competent in the specific discipline is taken to mean a person properly qualified, trained or knowledgeable in the application of design principles or methods.

Appropriate to the circumstances is taken to mean suitable and proper to the fact, occurrence, or condition in the time, place, manner, cause, occasion or surroundings.

In considering an exemption from registration/qualification under Clauses 2.17.4.1.(3)(l) and 2.17.5.1.(2)(h), one may wish to consider the following factors in assessing whether the design elements and designer meet the implied tests for exemption:

1. Whether the pre-engineered design applies to specific elements that are produced or manufactured in a standardized way prior to their assembly on site.
2. The availability of an Authorization under the Building Materials Evaluation Commission (BMEC) or a Minister's Ruling (and evaluation by CCMC), or equivalent.
3. Whether the building components are prefabricated and marketed for use as pre-engineered components with simplified design/product selection charts and tables based on specific design criteria.
4. Whether the designer has specialized licensing, training or knowledge in the application of design principles or proprietary design software for the selection and/or layout of the pre-engineered elements. For example, a professional engineer, architect, technologist, technician or other trained practitioner.
5. Whether the nature of the design and the designer's qualifications are suited to the design at hand. For example, whether the design is within the scope of an Authorization/Ruling or manufacturer's simplified, prescriptive design tables and assumptions, or the designer has specialized qualifications and training suitable to customize the design based on inherent product capabilities.

In consideration of the above, typical, pre-fabricated, wood trusses for houses and small buildings that are designed in accordance with the Truss Plate Institute of Canada (TPIC) publication "Truss Design Procedures and Specifications for Light Metal Plate Connected Wood Trusses" by designers trained and supported in TPIC procedures; and laid-out by designers trained and supported in the use of proprietary software developed by TPIC member organizations, would generally be seen as meeting the tests for registration/qualification exemptions.

Similarly, a designer's selection of proprietary, engineered wood products (LVL, PSL, LSL, OSL, OSB and prefabricated wood I-joists) that are Authorized through the BMEC or approved by Minister's Ruling, and that are selected, configured and installed in accordance with the requirements, conditions and limitation of these Authorizations and Rulings would generally be seen as meeting the tests for registration/qualification exemptions.

Under the Building Code Act, the local principal authority has jurisdiction for enforcing the Building Code Act and its Regulations. Designers should consult with the local principal authority before taking any action.

A. Suleman, P. Eng.
Manager/A, Code Interpretation, Registration and Training
Attachment

Attachment to Branch Opinion
OBC Clauses 2.17.4.1.(3)(l) and 2.17.5.1.(2)(h)
January 25, 2006

Wood Trusses and Engineered Wood Products

Wood Trusses

Wood trusses are typically fabricated from visually graded and machine stress-rated lumber connected by proprietary metal truss plates and are used in floor and roof applications. Wood trusses are widely used in single and multi-family residential, institutional, agricultural and commercial construction.

In general, wood trusses are required to be designed in accordance with Part 4 of the Building Code (O.Reg. 403/97, as amended). However, for houses and small buildings meeting the limitations for wood frame construction outlined in Article 9.23.1.1., wood roof trusses are permitted to be designed in accordance with the criteria outlined in Article 9.23.13.11. In particular, most are designed in accordance with Sentence 9.23.13.11.(6) which reads:

> Where the ability of a truss design to satisfy the requirements of Sentence (1) is demonstrated by analysis, it shall be carried out in accordance with good engineering practice such as described in "Truss Design Procedures and Specifications for Light Metal Plate Connected Wood Trusses," published by the Truss Plate Institute of Canada (TPIC).

The TPIC standard referenced in the Building Code includes responsibilities for the truss designer/engineer and overall building designer/engineer, specified loads, member and joint design procedures, and guidance on issues ranging from cantilevers to truss-to-truss connection and corrosion protection.

Engineered Wood Products

Engineered wood elements include products such as laminated veneer lumber (LVL), parallel strand lumber (PSL), laminated strand lumber (LSL), oriented strand lumber (OSL), oriented strand board (OSB) and prefabricated wood I-joists. LVL is a layered composite of wood veneers and adhesive. It is produced in various thicknesses and widths and used as headers and beams, flanges for prefabricated wood I-joists, or for other specific uses. PSL is a high strength structural composite lumber product manufactured by gluing thin veneer strands of wood together under pressure. It is produced in various thicknesses and widths and used as headers, beams and columns. LSL and OSL are also high strength structural composite lumber products manufactured by bonding thin strands of wood together under high pressure and temperature. It is produced in various thicknesses and width and used as rim boards, headers, beams, studs, sill plates, and stair stringers. Engineering literature generally refers to LVL, PSL, LSL, OSL and OSB together as structural composite lumber (SCL). Prefabricated wood I-joists are made by gluing solid sawn lumber or LVL/LSL flanges to a plywood or OSB panel web to produce a dimensionally stable lightweight member with published engineering properties.

While engineered wood products (LVL, PSL, LSL, OSL, OSB and prefabricated wood I-joists) are not specifically identified in the Building Code, many proprietary products are authorized either through the Building Material Evaluation Commission or approved by Minister's Ruling (after first receiving an evaluation by the Canadian Construction Materials Centre). The authorization/Ruling, evaluation and other specifications and erection materials as described in the Authorization/Ruling are the primary sources of information for design, typical installation details, and performance characteristics.

In addition, these documents will typically include simplified design/product selection charts and tables based on a number of parameters including span, loading, load pattern and deflection criteria.

They will also include design assumptions such as service conditions, lateral support, camber, bearing length and connection of multiples. Where product usage falls outside of the design/product selection tables or assumptions, product properties are provided to enable designers to custom design for capabilities including strength and serviceability.

Additional information about wood trusses, engineered wood products and other wood products is available from the Canadian Wood Council at www.cwc.ca. Information about the Truss Plate Institute of Canada (TIPC) is available at www.tpic.ca.

Insurance
Grant Dunn

Jan. 9/06 *

Greater | Grand Sudbury

Interoffice Correspondence

December 30, 2005

TO: **Building Services Staff**

FROM: **G. A. Mazza**

RE: **Bill 124 Final Phase Implementation**

As you are aware the final phase of the implementation process for the new Building Code regulatory changes commonly referred to as Bill 124 will take effect January 1, 2006. The changes to the Building Code Act announced on December 23, 2005 are with respect to Bill 128 "The Law Enforcement and Forfeited Property Management Stature Law Amendment Act, 2005" and do not affect Bill 124 requirements.

The previous initial implementation process changes outlined in my staff interoffice correspondence of June 30, 2005 remain for the most part intact except that now plans, specifications and inspection reports must be submitted by individuals qualified to do so or by individuals qualified and working for companies registered with the Ministry of Municipal Affairs and Housing. The Ministry's site for checking individuals' and companies' qualifications can be found at the Ministry of Municipal Affairs and Housing web site at www.obc.mah.gov.ca. The qualification and registration tracking system (QUARTS) is the public registry for maintaining this information. Samples of search screen results on QUARTS is provided in Appendix 'A'.

The guidelines of determining what is required for which specific type of work has been prepared in a chart form for your use (see Appendix 'B') for residential and non-residential buildings/structures.

The common Province-wide Building Permit application form (see Appendix 'C') continues to be mandated for use under the new Ontario Building Code.

We will phase out the use of our old short form Building Permit application form (see Appendix 'D') effective January 1, 2006.

...2

Applicants will still be able to submit incomplete applications as defined by Bill 124 provided they sign our acknowledgement form of that fact and thus waive benchmark turnaround times prescribed in the Building Code (see Appendix 'E'). Note the Front Desk Plans Examiner must fill in a portion of this form delineating what we believe is deficient with the application such as no site plan control agreement, no Health Unit approval of septic system, no HVAC drawings, and no Nickel District Conservation Authority approval for filling in flood plain, etc. prior to the applicant signing the form.

PROCESS CHANGES - JANUARY 1, 2006

Single Family Dwelling Building Permit Application (Applications Made for Construction as Defined by the Term "House" under the Ontario Building Code)

1. The architectural and structural house plans must be prepared by an individual qualified or qualified/registered as per the Ontario Building Code (see Chart Appendix 'B'). The Building Code Identification Number for the individual or company must appear on each sheet. The Plans Examiner of record is ultimately responsible for checking the "technical" qualifications as part of the overall plans examination process to ensure the design for which the permit is applied for matches those "technical" qualifications for the design individual or company as registered with the Ministry. However the front desk Plans Examiner must initially check these qualifications prior to accepting the building permit application. Drop-off applications provided to Permit Services that appear to be missing the "BCIN" requirements should be brought to the attention of the front desk Plans Examiner for follow up.

2. The plumbing permit requirements for single family dwellings and other applications captured under the definition of "House" in the new code will remain status quo within the City of Greater Sudbury. No "Designer Qualification" for these installations will be required provided they are licensed plumbing trades under City of Greater Sudbury Licensing By-law.

3. The submissions for heating, ventilation and air conditioning for single family dwellings shall essentially stay as noted in the June 30, 2005 memorandum, however the submissions must follow the qualification requirements of the Building Code (summarized in Appendix 'B') with the associated BCIN numbers supplied. Further, the owners and designers will need to fill out the attached forms (Appendix 'F') of Commitment and Undertaking for the HVAC design.

   Again, we will not hold up the basic building permit for lack of HVAC design submission, however the permit is issued conditional on providing the data for review prior to completion of building framing. It is anticipated that DLAC will recommend to Council a separate HVAC permit early in the new year and you will be informed of this once the Building By-law is changed to reflect this requirement.

The commitment and undertaking forms were requested by the development industry to facilitate minor changes in HVAC design without re-submission of design by BCIN designers for every field required modification. As well, it was an insurance policy for the design industry that their design and BCIN numbers were not being stolen without their knowledge.

4. Two additional site inspections for HVAC installation will be required: A rough-in field inspection for ducting and mechanical equipment and a final inspection, which will include the collection of the final Letter of General Conformance from the HVAC designer of record (see Appendix 'F' for draft sample letter). These inspections could be called in as a joint inspection with a framing inspection/occupancy or as separate inspections.

Part '9' Buildings/Renovations
(Buildings beyond the definition of "The House" Under the Ontario Building Code but not requiring design professional involvement by code)

1. These submissions as per our first phase implementation process memorandum of June 30, 2005 required additional submission of full HVAC drawings to supplement the architectural and structural submissions of the past. These submissions now will be required to have been prepared by a qualified individual and/or registered company as per code (see Appendix 'B') with the associated BCIN exhibited. The front desk Plans Examiner must review plans submitted for building permit application to ensure they comply prior to allowing it to proceed for processing. The Plans Examiner of record will ultimately be responsible for clearing the matching of technical qualification to design submitted as part of the plans review process. Again, if building permit application was a "drop-off" submission, Permit Services Clerks should notify the front desk Plans Examiner if submissions do not bear BCIN numbers for follow up.

2. The Plans Examiner, during the plans examination review, will fill out the mandated inspection list notice (attached Appendix 'G') for signature by the applicant at building permit pick up. This will serve to alert the applicant to his responsibilities for calling in the mandated inspection requests as part of his duties under the new Bill 124 Building Code regimen.

3. The requirements for plumbing design waived for Part '9' buildings conforming to the definition of "house" under the Ontario Building code do not apply to these types of Part '9' applications. A plumbing contractor wishing to assume these responsibilities must submit plans and be registered as a designer with the Ministry of Municipal Affairs and Housing with qualified staff to undertake "Plumbing All Buildings" design.

...4

Part 3 Buildings
(Requiring Design Professionals/Architects/Engineers)

1. Submissions for building permits for large Part 3 buildings remain to a certain extent status quo. The only additional requirement from the June 30, 2005 memorandum shall be that the design professionals involved must be qualified and registered with the Ministry of Municipal Affairs and Housing.

2. The architects through the Ontario Architects Association (OAA) have reached an alternative delivery process with the Ministry of Municipal Affairs and Housing for establishing code competency. Therefore, the architectural drawings' seal will serve as an equivalent to the Ministry's BCIN provided it is current and this can be checked on the OAA web site at www.OAA.on.ca, for what is called their Building Code Designation Number (BCDN). A sample of the web site screen for a search on one of our local architects is provided (Appendix 'H' attached).

3. The Professional Engineers have no alternative delivery process in place to date and therefore the qualified individuals and registered design companies' BCINs must be verified on the MMAH web site as per the process for non-professional designers. A sample for the Ministry web site out put is also provided (see Appendix 'A' attached).

4. Plans Examiners, as part of their examination of these Part 3 designs must as well provide a list of required mandated inspections specific to that project to be attached as a notice (see Appendix 'G') to the Building Permit envelope to be acknowledged by the permit holder on pick up.

5. Submissions of Building Permit applications which wish to be deemed complete submissions for the purposes of Bill 124, especially Part 3 buildings, must submit documentation establishing compliance with all applicable law as per Ontario Building Code Article 1.1.3.3.

   Our memorandum of June 30, 2005 provided a checklist that could be used by both Plans Examination staff and our customers to support their assertion of a "complete" submission.

   We have a more customer friendly version of the original applicable law checklist (see Appendix 'I') for use by our Plans Examination staff and permit applicants who may choose to use it as proof of compliance.

   Further, we have produced modified document check lists (see Appendix 'J') for the various Building Permit application types to help ensure proper submissions prior to arriving at our front counter. It is suggested front counter staff utilize these to convey requirements to individuals seeking information on application requirements as well as to designers/contractors to more clearly convey submission requirements.

6. The Ontario Architects Association has published a "Practice Bulletin" on their web site for use by their members entitled the "Building Code Designation System (BCDS) Identifying Information Required for Permit Application". This document provides a suggested best practice approach for architects when presenting documentation for Building Permit application. It also references another practice bulletin which deals with documentation conveying their Ontario Building Code review results upon which the design submitted is based. Both best practice bulletins are provided in Appendix 'K' for the use of Plans Examination staff, when dealing with our architectural submissions.

7. Shop drawings submitted for Part 3 buildings such as commercial cooking hood systems, sprinkler systems, structural steel, precast concrete slabs and pre-engineered roof trusses are required to be undertaken by individuals that are qualified and registered to the appropriate Ontario Building Code technical qualifications (see Appendix 'B').

Plans Examination/Building Inspection
Staff Qualifications and Internship Program

The Ministry of Municipal Affairs and Housing and the Ontario Building Officials Association have announced effective December 20, 2005, a Memorandum of Understanding has been signed to establish an Internship Program (see Appendix 'L').

It is our intention to establish an internship program as per Article 2.16.4.2 of the Ontario Building code with staff to facilitate upgrading to full technical qualification while allowing Inspectors/Plans Examiners to perform restricted duties within areas they have not achieved full technical qualification. Details will be provided to the technical staff once we have that information from my discussions with the Ontario Building Officials Association.

Public Information Packages

The Ministry of Municipal Affairs and Housing has released information brochures on the changes to the Ontario Building Code Act imposed by Bill 124 which we have provided to the public at our front counter since April, 2005 (see Appendix 'M'). Further to that we will provide two additional packages to assist the public and designers on these Code changes. One information package is general in nature and the second is more detailed (see Appendix 'M') for use by individuals actually providing design services to the public. We will be producing copies of these for distribution at our front counter.

Further, we are working with our web site designers to modify our department's web site to incorporate information on the Code changes as well, as providing direct links to the MMAH and OAA web sites.

Summary

We as a department through seminars, meetings and work shops have endeavoured to inform the public and the design community of the changes being implemented on January 1, 2006, under the Bill 124 banner. The design and development community through our efforts in association with the Development Liaison Advisory Committee (DLAC) have for the most part prepared themselves for this final phase implementation.

However, the implementation of these new requirements as per the initial implementation in July 1, 2005, should be done with a degree of sensitivity to our customers, especially one-time users so as not to unduly delay the processing of applications but ensuring our provincially mandated responsibilities have been addressed.

Flexibility shall be exercised with the approval of the Chief Building Official or the Acting Manager of Technical Services on a case by case basis if required. We will continue to work and meet with the DLAC subcommittee on Bill 124 Implementation to process information and feedback from the development community, applicants and staff in order that modification can be made where desirable and achievable within the new regulatory system.

Thank you for your help through the initial Bill 124 implementation process these last six months and your anticipated co-operation through this final implementation process.

GUIDO A. MAZZA, P. ENG.
DIRECTOR OF BUILDING SERVICES/
CHIEF BUILDING OFFICIAL

GAM/vk

Attachments

cc: R. Beaudry, Acting Manager of Technical Services

APPENDIX 'A'

Samples of Ministry of Municipal Affairs & Housing Qualification & Registration Tracking System (QUARTS) Public Registry Search Result

Ontario

Ministry of Municipal Affairs and Housing

Public Services Main Menu > Public Search Register

Public Search Register - Listing

Click on the hyperlink to view information for that individual or organization.

Press the "New Search" button to return to the Public Search Register - Criteria screen.

Search Criteria Entered:

Surname:	**Mazza**
Middle Name:	**A**
First Name:	**Guido**

Name	BCIN	Qualification / Registration	Status
Mazza, Guido	21787	Chief Building Official	Qualified

Result Page 1 of 1

[redacted]

Contact Us

2006-01-05 4:11:54 PM

162

Ontario

Ministry of Municipal Affairs and Housing

Public Services Main Menu > Public Search Register

Public Search Register - Listing

Click on the hyperlink to view information for that individual or organization.

Press the "New Search" button to return to the Public Search Register - Criteria screen.

Search Criteria Entered:

Organization Name: **J. L. Richards**

Name	BCIN	Qualification / Registration	Status
J. L. Richards & Associates Limited	29614	Registered Designer	Current

Result Page 1 of 1

[redacted]

Contact Us

2006-01-06 2:01:16 PM

163

Ontario

Ministry of Municipal Affairs and Housing

Public Services Main Menu > Public Search Register

Public Search Register - Registration Detail

Click on the "View Related Individuals" hyperlink to view a listing of related individuals for the registration.

Press the "Return to Search Results Listing" button to navigate to the results listing screen.

Press the "New Search" button to return to the Public Search Register - Criteria screen.

Name:	**J. L. Richards & Associates Limited**
BCIN:	**29614**
Registration:	**Registered Designer**
Classes of Registration:	**Building Services** **Building Structural** **Complex Buildings** **Detection, Lighting and Power** **Large Buildings** **Plumbing All Buildings** **Small Buildings**
Status:	**Current**

View Related Individuals

[redacted]

Contact Us

2006-01-06 2:01:27 PM

164

APPENDIX 'B'

Requirements Under the
Amended Building Code Act for
Designers of Residential/Non-Residential Buildings/Structures

REQUIREMENTS UNDER THE AMENDED BUILDING CODE ACT FOR DESIGNERS OF RESIDENTIAL BUILDINGS AND RESIDENTIAL ACCESSORY STRUCTURES (May 10, 2005)

Design Activities	Designer Must Be A Registered Designer (2.17.4.1.)	Designer Must Be A Qualified Designer[1] (2.17.5.1.)	Designer Need Not Be Registered or Qualified
NEW HOUSE[2] ERECTION OR INSTALLATION			
Designed by Owner	No 2.17.4.1.(3)(b)	No 2.17.5.1.(2)(b)(i)	Yes
Designed by Builder Registered under the ONHWP Act	No 2.17.4.1.(3)(a)	Yes	—
Designed by Others	Yes	—	—
NEW FACTORY-BUILT HOUSE UNDER CAN/CSA-A277			
Designed by Owner	No 2.17.4.1.(3)(b)	No 2.17.5.1.(2)(b)(i)	Yes
Designed by Others	No 2.17.4.1.(3)(i)	Yes	—
NEW MOBILE HOME UNDER CAN/CSA-Z240			
Designed by Owner	No 2.17.4.1.(3)(b)	No 2.17.5.1.(2)(b)(i)	Yes
Designed by Others	No 2.17.4.1.(3)(j)	Yes	—
NEW PARK MODEL TRAILER UNDER CAN/CSA-Z241			
Designed by Owner	No 2.17.4.1.(3)(b)	No 2.17.5.1.(2)(b)(i)	Yes
Designed by Others	No 2.17.4.1.(3)(k)	Yes	—
NEW RESIDENTIAL BUILDINGS OTHER THAN A HOUSE[2], FACTORY-BUILT HOUSE, MOBILE HOME OR PARK MODEL TRAILER			
Designed by Owner[3]	No 2.17.4.1.(3)(b)	Yes	—
Designed by Others[3]	Yes	—	—
SITE SERVICES (surface drainage and underground plumbing)			
Designed by Anyone[3]	No 2.17.4.1.(3)(h)	No 2.17.5.1.(2)(g)	Yes
PRE-ENGINEERED ELEMENTS			
Designed by Owner[3]	No 2.17.4.1.(3)(b)	No 2.17.5.1.(2)(b)(i)	Yes
Designed by Competent Designer[3]	No 2.17.4.1.(3)(l)	No 2.17.5.1.(2)(h)	Yes
Designed by Others[3]	Yes	—	—
APPLIANCES, EQUIPMENT AND SIMILAR INCIDENTAL COMPONENTS			
Designed by Anyone[3]	No 2.17.4.1.(3)(m)	No 2.17.5.1.(2)(i)	Yes
PLUMBING SYSTEM			
Designed by Owner of a House[2]	No 2.17.4.1.(3)(b)	No 2.17.5.1.(2)(b)(i)	Yes
Designed by Owner[3] of a Building Other than a House[2]	No 2.17.4.1.(3)(b)	Yes	—
Designed by Others for a House[2]	No 2.17.4.1.(4)(a)	Yes	—
Designed by Others[3] for a Building Other than a House[2]	Yes	—	—
HEATING, VENTILATION AND AIR CONDITIONING SYSTEM			
Designed by Owner of a House[2]	No 2.17.4.1.(3)(b)	No 2.17.5.1.(2)(b)(i)	Yes
Designed by Owner[3] of a Building Other than a House[2]	No 2.17.4.1.(3)(b)	Yes	—
Designed by Others for a House[2]	No 2.17.4.1.(4)(b)	Yes	—
Designed by Others[3] for a Building Other than a House[2]	Yes	—	—
ANCILLARY BUILDINGS (such as garages) FOR A HOUSE[2]			
Designed by Owner	No 2.17.4.1.(3)(b)	No 2.17.5.1.(2)(b)(ii)	Yes
Designed by Others for buildings <50m^2	No 2.17.4.1.(4)(c)	No 2.17.5.1.(2)(j)	Yes
Designed by Others for buildings >50m^2	No 2.17.4.1.(4)(c)	Yes	—

DETACHE. ;RUCTURE FOR ANY BUILDING OTHER THAN AN ANCILLARY BUILDING FOR A HOUSE[2]			
Designed by Owner[3]	No 2.17.4.1.(3)(b)	Yes	—
Designed by Others[3] for a New Structure	Yes	—	—
Designed by Others[3] to Extend, Alter or Repair an Existing Structure >50m^2	Yes	—	—
Designed by Others[3] to Extend, Alter or Repair an Existing Structure for a Building Other than a House[2]	Yes	—	—
Designed by Others to Extend, Alter or Repair an Existing Structure <50m^2 for a Building that is a House[2]	No 2.17.4.1.(3)(d)(ii)	Yes	—
ADDITIONS, ALTERATIONS, REPAIRS TO AN EXISTING BUILDING			
Designed by Owner of a House[2]	No 2.17.4.1.(3)(b)	No 2.17.5.1.(2)(b)(i)	Yes
Designed by Owner[3] of a Building Other than a House[2]	No 2.17.4.1.(3)(b)	Yes	—
Designed by Others for a House[2]	No 2.17.4.1.(3)(d)(i)	Yes	—
Designed by Others[3] of a Building Other than a House[2]	Yes	—	—
SECOND SUITE ADDED TO EXISTING HOUSE[2]			
Designed by Owner	No 2.17.4.1.(3)(b)	No 2.17.5.1.(2)(b)(i)	Yes
Designed by Others	No 2.17.4.1.(3)(d)(i)	Yes	—
CONVERTING A DWELLING UNIT TO A ROOMING HOUSE			
Designed by Owner	No 2.17.4.1.(3)(b)	Yes	—
Designed by Others	Yes	—	—
SEWAGE SYSTEM			
Designed by Owner[3]	No 2.17.4.1.(3)(b)	No 2.17.5.1.(2)(d)(ii)	Yes
Designed by Registered Sewage System Installer[3]	No 2.17.4.1.(3)(e)	No 2.17.5.1.(2)(d)(i)	Yes
Designed by Others[3]	Yes	—	—

Notes:

(1) The designer is exempted from being qualified if someone else who is either an employee of a registered designer under 2.17.4.7.(1)(d), or is otherwise qualified under 2.17.5.1.(1) reviews and takes responsibility for the design compliance with the Building Code, as per 2.17.5.1.(2)(a).

(2) A house must be a detached house, a semi-detached house, a town house or a row house containing not more than two dwelling units in each house.

(3) 2.3.1.1. of the OBC requires that certain buildings, including all Part 3 buildings, be designed by a professional engineer, an architect or both as prescribed. Such professional designers must also be qualified and registered when prescribed by Section 2.17 of the OBC.

REQUIREMENTS UNDER THE AMENDED BUILDING CODE ACT FOR DESIGNERS OF NON-RESIDENTIAL BUILDINGS AND NON-RESIDENTIAL ACCESSORY STRUCTURES (May 10, 2005)

	Designer Must Be A Registered Designer (2.17.4.1.)	Designer Must Be A Qualified Designer[1] (2.17.5.1.)	Designer Need Not Be Registered or Qualified
FARM BUILDINGS OF LOW HUMAN OCCUPANCY, < 3 STOREYS AND < 600 m²			
Designed by Anyone[2]	No 2.17.4.1.(3)(c)	No 2.17.5.1.(2)(c)	Yes
FARM BUILDINGS OTHER THAN ABOVE			
Designed by Owner[2]	No 2.17.4.1.(3)(b)	Yes	—
Designed by Others[2]	Yes	—	—
TENTS < 225 m2, NO BLEACHERS AND NO SIDEWALLS			
Designed by Anyone[2]	No 2.17.4.1.(3)(f)	No 2.17.5.1.(2)(e)	Yes
TENTS OTHER THAN ABOVE			
Designed by Owner[2]	No 2.17.4.1.(3)(b)	Yes	—
Designed by Others[2]	Yes	—	—
SIGNS			
Designed by Anyone[2]	No 2.17.4.1.(3)(g)	No 2.17.5.1.(2)(f)	Yes
SITE SERVICES (includes surface drainage and underground plumbing)			
Designed by Anyone[2]	No 2.17.4.1.(3)(h)	No 2.17.5.1.(2)(g)	Yes
PRE-ENGINEERED ELEMENTS			
Designed by Owner[2]	No 2.17.4.1.(3)(b)	Yes	—
Designed by Person Competent in the Specific Discipline Appropriate to the Circumstances[2]	No 2.17.4.1.(3)(l)	No 2.17.5.1.(2)(h)	Yes
Designed by Person Other than Above[2]	Yes	—	—
APPLIANCES, EQUIPMENT AND SIMILAR INCIDENTAL COMPONENTS OF A BUILDING			
Designed by Anyone[2]	No 2.17.4.1.(3)(m)	No 2.17.5.1.(2)(i)	Yes
SEWAGE SYSTEM			
Designed by Owner[2]	No 2.17.4.1.(3)(b)	No 2.17.5.1.(2)(d)(ii)	Yes
Designed by Registered Sewage System Installer[2]	No 2.17.4.1.(3)(e)	No 2.17.5.1.(2)(d)(i)	Yes
Designed by Others[2]	Yes	—	—
DESIGNATED STRUCTURES PRESCRIBED IN SECTION 2.1.2.			
Designed by Owner[2]	No 2.17.4.1.(3)(b)	Yes	—
Designed by Others[2]	Yes	—	—
ALL OTHER NON-RESIDENTIAL BUILDINGS			
Designed by Owner[2]	No 2.17.4.1.(3)(b)	Yes	—
Designed by Others[2]	Yes	—	—

Notes:

(1) The designer is exempted from being qualified if someone else who is either an employee of a registered designer under 2.17.4.7.(1)(d), or is otherwise qualified under 2.17.5.1.(1) reviews and takes responsibility for the design compliance with the Building Code, as per 2.17.5.1.(2)(a).

(2) 2.3.1.1. of the OBC requires that certain buildings, including all Part 3 buildings, be designed by a professional engineer, an architect or both as prescribed. Such professional designers must also be qualified and registered as prescribed by Section 2.17 of the OBC.

APPENDIX 'C'

OBC Mandated Common Province-Wide Application Form

Greater Grand Sudbury

Application for a Permit to Construct or Demolish

This form is authorized under the Building Code Sentence 2.4.1.1A.(2).

City of Greater Sudbury
Building Services, P. O. Box 5000, Stn. A. Sudbury, Ontario P3A 5P3

For use by Principal Authority	
Application number:	Permit number (if different):
Date received:	Roll number:

Application submitted to: _____
(Name of municipality, upper-tier municipality, board of health or conservation authority)

A. Project information			
Building number, street name		Unit number	Lot/con.
Municipality	Postal code	Plan number/other description	
Project value est. $		Area of work (m^2)	

B. Applicant Applicant is: ☐ Owner or ☐ Authorized agent of owner			
Last name	First name	Corporation or partnership	
Street address		Unit number	Lot/con.
Municipality	Postal code	Province	E-mail
Telephone number ( )	Fax ( )	Cell number ( )	

C. Owner (if different from applicant)			
Last name	First name	Corporation or partnership	
Street address		Unit number	Lot/con.
Municipality	Postal code	Province	E-mail
Telephone number ( )	Fax ( )	Cell number ( )	

D. Builder (optional)			
Last name	First name	Corporation or partnership (if applicable)	
Street address		Unit number	Lot/con.
Municipality	Postal code	Province	E-mail
Telephone number ( )	Fax ( )	Cell number ( )	

E. Purpose of application				
☐ New construction	☐ Addition to an existing building	☐ Alteration/repair	☐ Demolition	☐ Conditional Permit
Proposed use of building		Current use of building		
Description of proposed work				

F. Tarion Warranty Corporation (Ontario New Home Warranty Program)

i. Is proposed construction for a new home as defined in the *Ontario New Home Warranties Plan Act*? If no, go to section G. ☐ Yes ☐ No

ii. Is registration required under the *Ontario New Home Warranties Plan Act*? ☐ Yes ☐ No

iii. If yes to (ii) provide registration number(s): _____

G. Attachments

i. Attach documents establishing compliance with applicable law as set out in Article 1.1.3.3.

ii. Attach Schedule 1 for each individual who reviews and takes responsibility for design activities.

iii. Attach Schedule 2 where application is to construct on-site, install or repair a sewage system.

iv. Attach types and quantities of plans and specifications for the proposed construction or demolition that are prescribed by the by-law, resolution, or regulation of the municipality, upper-tier municipality, board of health or conservation authority to which this application is made.

H. Declaration of applicant

I _____ certify that:
(print name)

1. The information contained in this application, attached schedules, attached plans and specifications, and other attached documentation is true to the best of my knowledge.
2. I have authority to bind the corporation or partnership (if applicable).

_____ _____
Date Signature of applicant

Personal information contained in this form and schedules is collected under the authority of subsection 8(1.1) of the *Building Code Act, 1992*, and will be used in the administration and enforcement of the *Building Code Act, 1992*. Questions about the collection of personal information may be addressed to: a) the Chief Building Official of the municipality or upper-tier municipality to which this application is being made, or, b) the inspector having the powers and duties of a chief building official in relation to sewage systems or plumbing for an upper-tier municipality, board of health or conservation authority to whom this application is made, or, c) Director, Building and Development Branch, Ministry of Municipal Affairs and Housing 777 Bay St., 2nd Floor. Toronto, M5G 2E5 (416) 585-6666.

Schedule 1: Designer Information

Use one form for each individual who reviews and takes responsibility for design activities with respect to the project.

A. Project Information

Building number, street name		Unit no.	Lot/con.
Municipality	Postal code	Plan number/ other description	

B. Individual who reviews and takes responsibility for design activities

Name		Firm	
Street address		Unit no.	Lot/con.
Municipality	Postal code	Province	E-mail
Telephone number ( )	Fax number ( )		Cell number ( )

C. Design activities undertaken by individual identified in Section B. [Building Code Table 2.20.2.1]

- ❑ House
- ❑ Small Buildings
- ❑ Large Buildings
- ❑ Complex Buildings
- ❑ HVAC – House
- ❑ Building Services
- ❑ Detection, Lighting and Power
- ❑ Fire Protection
- ❑ Building Structural
- ❑ Plumbing – House
- ❑ Plumbing – All Buildings
- ❑ On-site Sewage Systems

Description of designer's work

D. Declaration of Designer

I _____ declare that (choose one as appropriate):
(print name)

❑ I review and take responsibility for the design work on behalf of a firm registered under subsection 2.17.4. of the Building Code. I am qualified, and the firm is registered, in the appropriate classes/categories.

Individual BCIN: _____

Firm BCIN: _____

❑ I review and take responsibility for the design work and am qualified in the appropriate category as an "other designer" under subsection 2.17.5. of the Building Code.

Individual BCIN: _____

Basis for exemption from registration: _____

❑ The design work is exempt from the registration and qualification requirements of the Building Code.

Basis for exemption from registration and qualification: _____

I certify that:

1. The information contained in this schedule is true to the best of my knowledge.
2. I have authority to bind the corporation or partnership (if applicable).

_____ Date

_____ Signature of Designer

*For the purposes of this form, "individual" means the "person" referred to in Clause 2.17.4.7.(1)(d), Article 2.17.5.1. and all other persons who are exempt from qualification under Subsections 2.17.4. and 2.17.5.

NOTE:

1. Firm and Individual BCIN numbers are not required for building permit applications submitted prior to January 1, 2006
2. Schedule 1 does not need to be completed by architects, or holders of a Certificate of Practice or a Temporary License under the *Architects Act*.

Schedule 2: Sewage System Installer Information

Project Information

Building number, street name			Unit number	Lot/con.
Municipality	Postal code	Plan number/ other description		

B. Sewage system installer

Is the installer of the sewage system engaged in the business of constructing on-site, installing, repairing, servicing, cleaning or emptying sewage systems, in accordance with Building Code Article 2.18.1.1?

- ☐ Yes (Continue to Section C)
- ☐ No (Continue to Section E)
- ☐ Installer unknown at time of application (Continue to Section E)

C. Registered installer information (where answer to B is "Yes")

Name			BCIN	
Street address			Unit number	Lot/con.
Municipality	Postal code	Province	E-mail	
Telephone number ( )	Fax ( )		Cell number ( )	

D. Qualified supervisor information (where answer to section B is "Yes")

Name of qualified supervisor(s)	Building Code Identification Number (BCIN)

E. Declaration of Applicant:

I _____ declare that:
(print name)

- ☐ I am the applicant for the permit to construct the sewage system. If the installer is unknown at time of application, I shall submit a new Schedule 2 prior to construction when the installer is known;

OR

- ☐ I am the holder of the permit to construct the sewage system, and am submitting a new Schedule 2 now that the installer is known.

I certify that:

1. The information contained in this schedule is true to the best of my knowledge.
2. I have authority to bind the corporation or partnership (if applicable).

_____ _____
Date Signature of applicant

APPENDIX 'D'

Old Short Form Building Permit Application

APPLICATION
BUILDING PERMIT

Sudbury Greater | Grand
www.city.greatersudbury.on.ca

ZONING: _____

APPLICATION DATE: _____ **MUNICIPALITY:** _____

LOCATION OF WORK

Please print legibly

MUNICIPAL ADDRESS: _____

CONSTRUCTION TYPE

☐ SINGLE FAMILY DWELLING ☐ SEMI-DETACHED ☐ DUPLEX ☐ MOBILE HOME ☐ APARTMENT BUILDING
☐ ROW HOUSING ☐ ADDITION ☐ DETACHED GARAGE ☐ SHED ☐ DECK ☐ BARN ☐ WEEPING TILES
☐ FOUNDATION ☐ INTERIOR ALTERATIONS ☐ FINISHED BASEMENT ☐ OTHER _____

☐ COMMERCIAL ☐ INDUSTRIAL ☐ INSTITUTIONAL ☐ ACCESSORY BUILDING ☐ INTERIOR ALTERATIONS
☐ OTHER _____

VALUE OF PROPOSED WORK: $ _____

DESCRIPTION OF STRUCTURE (Specify Imperial or Metric measures)

Length: _____ Width: _____ Height: _____ Storeys: _____
Ground Area: _____ Gross Area: _____

SETBACKS:

Front Yard: _____ Rear Yard: _____ Side Drive Yard: _____ Side Yard Other: _____
LOT DIMENSIONS: Frontage: _____ Depth: _____ Area: _____

APPLICANT/AGENT

NAME: _____
ADDRESS: _____
TELEPHONE: _____

PROPERTY OWNER

NAME: _____
ADDRESS: _____
TELEPHONE: _____

CONTRACTOR

NAME: _____
ADDRESS: _____
TELEPHONE: _____

ARCHITECT

NAME: _____
ADDRESS: _____
TELEPHONE: _____

ENGINEER

NAME: _____
ADDRESS: _____
TELEPHONE: _____

ACCEPTED BY (Building Services)

Customer Service Representative
Building Services

DECLARATION

I further agree to strictly adhere to and abide by the by-laws and regulations relating to the work, and at all times to rigidly follow the advise and instructions of the Building Inspector and also to Saale and protect the City of Greater Sudbury and all its officials from any damages and claims for damages of any kind arising out of or pertaining to the work referred to herein.

_____
Signature of Owner or Agent

Building Services
Economic Development and Planning Services Department
(705)674-4455, Ext. 4278

PERMIT APPLICATION

☐ PRINCIPLE BUILDING

☐ ACCESSORY BUILDING

COST ESTIMATE $ _____

☐COMPLETE BUILDING ☐FOUNDATION ☐PARTIAL ☐CONDITIONAL

☐ADD ☐ALTER ☐CHANGE OF USE ☐DEMOLISH ☐PLUMBING*

☐HVAC ☐POOL ENCLOSURE

☐OTHER: _____

NOTE: *PLUMBING WORK MUST BE DONE BY A MASTER PLUMBER LICENSED BY THE CITY OF GREATER SUDBURY OR BY HOMEOWNER UNDER CERTAIN CONDITIONS. FOR MORE DETAILS, CALL BUILDING SERVICES AT 671-2489, EXT. 4278.

☐ SINGLE FAMILY HOUSE ☐ SEMI-DETACHED ☐ DUPLEX/TRIPLEX ☐ ROW DWELLING ☐ APARTMENT

☐ MOBILE HOME ☐ GARAGE/CARPORT ☐ POOL ENCLOSURE ☐ DECK ☐OTHER

☐COMMERCIAL ☐ INDUSTRIAL ☐INSTITUTIONAL RESIDENTIAL ☐ INSTITUTIONAL OTHER ☐ GOVERNMENT/CITY☐

☐ STRUCTURAL ☐ MECHANICAL ☐ SUPERSTRUCTURE ☐ OTHER _____

BRIEFLY DESCRIBE PROPOSED WORK, USE AND OCCUPANCY OF LAND AND BUILDING: _____

LOCATION OF WORK: _____

EXISTING SEPTIC SYSTEM ☐YES NOO (IF YES, CALL THE HEALTH UNIT FOR MORE DETAILS AT 705-522-9200.)

PROPERTY OWNER'S NAME _____
AND ADDRESS _____
PHONE _____ FAX _____ E-MAIL _____

AGENT/CONTRACTOR'S NAME _____
AND ADDRESS _____
PHONE _____ FAX _____ E-MAIL _____

DECLARATION ***(The following declaration is to confirm that you are aware of and understand the important conditions noted, which will apply to the permit when issued.)***

I, the undersigned, _____, solemnly declare that I am the OWNER☐ or the AUTHORIZED AGENT OF THE OWNER☐ named in this application for a building permit. All the information included in this application and documents filed with this application is, to the best of my knowledge, true. I acknowledge that the Building Permit could be revoked if certain procedures of the Building Code Act are contravened or if a permit is issued on mistaken or false information or not acted upon within six months from the date of issuance or where the work is abandoned for more than one year. I am also aware that AN EXTRA ADMINISTRATION FEE WILL BE ADDED IF WORK COMMENCES BEFORE THE PERMIT IS ISSUED.

I further agree to assume responsibility for the construction, unless the Agent or Property Owner is performing the work as a Registered Builder under the Ontario New Home Warranty Program, IF APPLICATION IS FOR THE CONSTRUCTION OF A NEW HOUSE The Builder's Ontario New Home Warranty Registration No.: _____

Signature of Witness: _____ Applicant's Signature: _____

FOR OFFICE USE ONLY		ZONE			
PROCESS	☐ SAME DAY ☐ FAST TRACK	ADDITIONAL APPROVALS REQUIRED			ESTIMATED COST OF WORK $ _____ PERMIT FEE $ _____
☐ PART 3 ☐ PART 9 DATE & TIME RECEIVED:		COA	☐YES	☐NO	PREPAID PERMIT FEE
		LAND DIVISION	☐YES	☐NO	RECEIPT: _____
		REZONING	☐YES	☐NO	DATE: _____
		SPCA	☐YES	☐NO	VISA AUTHORIZATION NO.: _____

Building Services
Economic Development and Planning Services Department
3rd Floor Tom Davies Square, 200 Brady Street, SUDBURY, ON P3A 5P3
(705)-671-2489, Ext 4278 FAX: 705-675-1078

www.city.greatersudbury.on.ca
www.planningsudbury.com

APPENDIX 'E'

Acknowledgement of Incomplete Application Form

Greater Grand Sudbury

Acknowledgement by Applicant of Incomplete Application

Pursuant to Sentence 2.4.1.1.B(5) of the building code

For use by Principal Authority			
Application number:	Date received:		
Building number, street name		Unit number	Lot/con.

A prescreening of the application described above reveals it is incomplete in that all applicable laws have not been met, and/or insufficient documents and drawings have been provided, at the time of application. The incomplete items include but are not necessarily limited to the items described below.

INCOMPLETE ITEMS AT THE TIME OF APPLICATION

☐ Applicable law approvals have not all been obtained, as described below or in the attached applicable law compliance summary

☐ All of the required documents which must be filed with this application have not been provided, including the items described below or in the attached document submission checklist

According to the building code and the City's building by-law, since this application is incomplete it may be either:

a) refused since it is not complete, or
b) accepted and processing commenced, provided the applicant acknowledges in writing that the application is incomplete and waives the time period prescribed in the building code within which the permit must be issued or refused.

APPLICANT'S WAIVER

The undersigned acknowledges that:

(a) the application described above does not meet the requirements of 2.4.1.1.B(5) of the building code and hereby waives any rights to the permit being issued or refused within the time periods prescribed in the building code; and
(b) the items described above must be completed before this application can be fully processed or a permit issued.

I have authority to act on behalf of the corporation or partnership with respect to this application(if applicable)

Date _____ Signature of applicant _____

APPENDIX 'F'

HVAC Systems Owner's Undertaking
HVAC Systems Designer's Commitment Certificate
Draft Form Designer's Letter of General Conformance

HEATING, VENTILATION & AIR CONDITIONING SYSTEMS

Greater Grand Sudbury

OWNER'S UNDERTAKING

This form to be completed by the owner or owner's authorized agent

Permit Application No.

Project Description: **Date:**

Address of Project:

WHEREAS the Ontario Building code requires that the project described above have the heating, ventilation and air conditioning system (HVAC) designed by a qualified designer under Section 2.17.5.1 or a registered designer under Section 2.17.4.1 and registered as such with the Ministry of Municipal Affairs & Housing;

NOW THEREFORE the Owner, being the person who intends to construct or have the building constructed hereby warrants that:

1. The qualified or registered designer of the HVAC system has been retained to provide general reviews of the construction of the system to determine whether the construction is in general conformity with the plans and other documents that form the basis for the issuance of the building permit, in accordance with the City of Greater Sudbury Building By-law;

2. A final Letter of General Conformance shall be provided to the Chief Building Official by the retained qualified or registered designer to certify site construction to plans and documents that form the basis of issuance of the building permit, and

3. Should the qualified or registered designer cease to provide general reviews for any reason during construction, the Chief Building Official will be notified in writing immediately, and another qualified or registered designer under Section 2.17.5.1 and 2.17.4.1 respectively will be appointed so that general review continues without interruption during construction.

The undersigned hereby certifies that he/she has read and agrees to the above

Name of Owner: **Telephone:**

Address of Owner: **Fax:**

Signature of Owner:
(or officer of Corporation) **Print Name:**

Qualified or registered designer of HVAC system: **Telephone:**

Address: **Fax:**

Greater | Grand Sudbury
www.city.greatersudbury.on.ca

HEATING VENTILATION & AIR CONDITIONING SYSTEMS

COMMITMENT CERTIFICATE

THIS FORM TO BE SIGNED BY ALL QUALIFIED OR REGISTERED DESIGNERS RETAINED FOR GENERAL REVIEWS

Permit Application No.

Project Description: **Date:**

Address of Project:

The undersigned qualified or registered HVAC designers hereby certify that they have been retained to provide general reviews of the parts of construction of the building indicated, to determine whether the construction is in general conformity with the plans and other documents that form the basis for the issuance of the building permit, in accordance with the requirements of the Ontario Building Code and provide to the Chief Building Official a final Letter of General Conformance to that design as per the requirements of the City of Greater Sudbury Building By-law.

The undersigned hereby certifies that he/she has read and agrees to the above

☐ **HEATING** ☐ **VENTILATION** ☐ **AIR CONDITIONING** ☐ **HYDRONICS**

Consultant Firm: **Signature:** **Print Name:**

Address: **Telephone:** **Fax:**

KEYBOARD(Date)

On Designer Letterhead

City of Greater Sudbury
Building Services
PO Box 5000, Stn A
200 Brady Street
Sudbury, Ontario
P3A 5P3

Attention: Mr. Guido Mazza, P.Eng.
Director of Building Services/
Chief Building Official

Dear Sir:

Re: Letter of General Conformance - KEYBOARD(Heating, Ventilating, Air Conditioning)
KEYBOARD(Project Description)
Building Permit #KEYBOARD(Number)

This letter shall serve to confirm to you that we have undertaken a general review of the above referenced project for the HVAC components of the building proper. The general review which consisted of periodic examination and reports of the building's HVAC construction was undertaken and has determined that the HVAC components of the building were constructed in general conformity with the drawings and specifications that formed the basis of issuance of the building permit.

Thank you for your attention to this matter and if you should have any questions, please do not hesitate to contact this office.

Yours very truly,

KEYBOARD(Name)

BCIN Number

APPENDIX 'G'

Mandated Required Field Inspection List Notice

Sudbury Greater Grand

CITY OF GREATER SUDBURY
Mandatory Inspection List

P. # Plans Examiner: Owner:

ontractor: Construction Site Address:

IPORTANT INSTRUCTIONS TO HOME OWNERS OR CONTRACTORS
andatory Field Inspections List

ne Building Services Section of the Growth & Development Department is responsible for conducting building inspections for dditions, alterations, the erection of new buildings, the demolition of buildings, including the installation and/or renovation of eating/plumbing works for which permits have been issued in the City of Greater Sudbury.

o-operation of the owner or contractor is required to ensure that inspections are conducted during the stages of construction sted below. Failure to notify may require that any or all of the items to be inspected are to be exposed to the satisfaction of the ispector at a later date, and prosecution under the Ontario Building Code Act for failure to call for required inspections.

BUILDING

] 1. FOOTING INSPECTIONS: Required when footing forms are in place and before any concrete is poured.

] 2. WEEPING TILE INSPECTION: Required prior to the placing of backfill material and immediately after the installation of weeping tiles. Crushed stone to be in place over weeping tiles except for corners and building entry location. Appropriate backfill material to be placed as described in the Ontario Building Code.

] 3. FRAMING INSPECTION: Required after framing completed and before insulation is applied for multi-level industrial commercial institutional projects, a structural framing inspection is required for each floor.

] 4. INSULATION INSPECTION: Required after insulation and vapour barrier are in place **and before** any wall board or wall covering is installed.

] 5. OCCUPANCY INSPECTION: Required before occupancy; a final inspection may also be required if construction is incomplete at time of occupancy.

HEATING, VENTILATION & AIR CONDITIONING (HVAC)

The installation or alteration of any HVAC works must be inspected by the City of Greater Sudbury.

☐ 1. ROUGH-IN INSPECTION: Required after rough-in duct work or piping for HVAC system in place and prior to installation of wall covering which would conceal such works.

☐ 2. FINAL HVAC INSPECTION: Required **after** system is completed and all equipment installed and ready for use.

PLUMBING

A plumbing permit is required prior to the installation or alteration of any plumbing works in the City of Greater Sudbury

☐ 1. GROUND WORK INSPECTION: Required immediately after all underground piping is installed and before placing any material on or over the pipes. At this stage, an air or water test is required before being approved by the inspector.

☐ 2. ROUGH-IN INSPECTION: Required after rough-in plumbing completed and prior to installation of wall covering which would conceal the piping. At this stage, an air or water test is conducted.

☐ 3. FINAL PLUMBING INSPECTION: Required after the system is completed, all fixtures installed and ready to use.

FIRE SEPARATIONS AND CLOSURES

☐ 1. FIRE LIFE SAFETY INSPECTIONS: Required upon substantial completion of all required fire separations and closures and all fire protection systems including stand pipe, sprinkler, fire alarm and emergency lighting systems.

Alternative methods for establishing compliance with the Ontario Building Code such as professional consultant reports are **NOT** acceptable without prior approval of the Chief Building Official.

Builders are required to notify Building Services prior to occupying the building.

PHONE: 671-2489, extension 4278 **CHIEF BUILDING OFFICIAL**

I hereby acknowledge my responsibilities under the Ontario Building Code for having the above listed inspections undertaken by the City of Greater Sudbury.

Owner/Agent Signature:_____ Date:_____ Witness:_____ 184

APPENDIX 'H'

Sample from Ontario Architects Association Building Code Designation Number Registry

OAA BCDS Registry - Practices

Database updated: January 3, 2006

For more information, visit the OAA BCDS section.

Nicholls Yallowega Belanger Architects -

Architectes
255 Larch St.
Sudbury, ON P3B 1M2 Canada
Phone: (705) 675-3383
Email: nyb@nybarch.com
Web site: www.nybarch.com

Building Code Designation Number (BCDN): 3943

Categories of Building Code Qualification:

House	**Architect BCDN**
Michael A. Luciw	4455
Louis W. Belanger	4214
Small Buildings	**Architect BCDN**
Michael A. Luciw	4455
Louis W. Belanger	4214
Large Buildings	**Architect BCDN**
Michael A. Luciw	4455
Louis W. Belanger	4214
Complex Buildings	**Architect BCDN**
Michael A. Luciw	4455
Louis W. Belanger	4214

186

APPENDIX 'I'

Applicable Law Check List

Sudbury Greater | Grand

Applicable Law Checklist

Pursuant to Section G of an application to Construct or Demolish

For use by Principal Authority

Application no.	Address	Date

The following approval processes must be completed if they apply to this project, before a building permit can be issued. This listing is provided for convenience purposes only and does not necessarily describe every approval which may be necessary. For more detailed information about the application of these laws to any project, please contact the listed agency, or refer to the actual text of the legislation. For assistance in completing this form, please contact your municipal building department.
Completing this form accurately and providing necessary documents will expedite the issuance of your building permit.

Please check [✓] the items that apply, and attach approval documents where applicable.

LOCAL MUNICIPALITY

	▼ FORM OF APPROVAL REQUIRED	DOCUMENTS RECEIVED ▼
Planning & Zoning		
☐ MINOR VARIANCE *Planning Act s. 45* Where application doesn't comply with all zoning provisions	Final & binding decision by Committee of Adjustment Contact: Local Planning Department	_____
☐ ZONING BY-LAW AMENDMENT *Planning Act s. 34* Where development requires amended zoning by-law	Zoning by-law final & binding Contact: Local Planning Department	_____
☐ DIVISION OF LAND *Ref. Planning Act Part VI* Where land division required for zoning compliance	Registration of Plan or Deed Contact: Local Planning Department	_____
☐ PROVINCIAL ZONING ORDERS *Planning Act s. 47* For areas covered by Minister's zoning orders	Approval of the Minister Contact: MMAH Services Office in your region	_____
☐ SITE PLAN APPROVAL *Planning Act s. 41* For development in site plan control areas	Approval of site plans by municipality Contact: Local Planning Department	_____
☐ *Planning & Development Act* Where Provincial planning control has been applied	Approval of the Minister Contact: MMAH Services Office in your region	_____
Heritage		
HERITAGE PERMITS ☐ *Ontario Heritage Act s. 33, 34* Where property is designated under the *Heritage Act*	Consent of Council to alter or demolish Contact: Local Heritage Committee or Clerk of Municipality	_____
☐ *Ontario Heritage Act s. 42* Where land is in a heritage conservation district	Heritage permit issued by Council Contact: Local Heritage Committee or Clerk of Municipality	_____
Fortifications		
☐ BUILDING FORTIFICATIONS Where building is fortified against entry	Compliance with the local fortification by-law, if any Contact: Local by-law enforcement office	_____

CONSERVATION AUTHORITY

	▼ FORM OF APPROVAL REQUIRED	DOCUMENTS RECEIVED ▼
Conservation		
☐ AUTHORITY PERMIT *Conservation Authorities Act s. 28* Where construction is in a fill regulated area or floodplain, or may interfere with a watercourse	Construction & fill permit Contact: Local Conservation Authority Office	_____

PROVINCIAL APPLICABLE LAWS

	▼ FORM OF APPROVAL REQUIRED	DOCUMENTS RECEIVED ▼
Agriculture & Food	Ministry of Agriculture & Food	
☐ *Nutrient Management Act 2002 s. 11* Farm buildings housing animals or animal manure	Ministry approval of nutrient management strategy Contact: John Johnson, P.Eng. 519-873-4096	_____
☐ *Milk Act s. 14* Where building used as a milk processing plant	Permit issued by the Director, MAF Contact: Food Inspection Branch 1-888-466-2372	_____
Charitable Institutions	Ministry of Health & Long Term Care	
☐ *Charitable Institutions Act s. 5* Where building is used for a charitable institution	Minister's approval of construction Contact: Long-Term Care Planning 1-877-767-8889	188

PROVINCIAL APPLICABLE LAWS [continued]	▼ APPROVALS REQUIRED	DOCUMENTS RECEIVED ▼
Child Care Centres	Ministry of Children & Youth Services	
☐ *Day Nurseries Act s. 5* Where building is used for a daycare	Ministry plan approval Contact: Regional Office in your area	_____
Education	Ministry of Education	
☐ DEMOLITION OF SCHOOLS *Education Act s. 194* Where a school is proposed to be demolished	Minister's approval of demolition Contact: Steve Mitchell, Architect 416-325-2015	_____
Environment	Ministry of the Environment	
☐ *Environmental Assessment Act s. 5* Major industrial or commercial enterprises & Government projects	Minister's approval of Terms of reference & EA Contact: MOE Assessment & Approvals 1-800-461-6290	_____
☐ MOE CERTIFICATE OF APPROVAL *Environmental Protection Act s. 9* Where building may discharge contaminants	Certificate of Approval issued by MOE Contact: MOE Investigations & Enforcement 416-326-6700	_____
☐ BROWNFIELD REDEVELOPMENT *Environmental Protection Act s. 168* Where industrial or commercial property changed to residential or parkland use	Record of Site Condition filed with MOE Conformance with Certificate of Property Use Contact: Tim Krsul, MOE Central Region 416-326-4840	_____
☐ FORMER LANDFILLS *Environmental Protection Act s. 46* Where building on former waste disposal site	Minister's approval to use the land Contact: MOE Investigations & Enforcement 416-326-6700	_____
Funeral Homes	Ministry of Consumer & Business Services	
☐ *Funeral Directors and Establishments Act s. 9* Where building houses funeral establishment	Notify Registrar, MCBS Contact: Board of Funeral Services 1-800-387-4458	_____
Highways	Ministry of Transportation	
☐ MTO PERMIT *Public Transportation Act s. 34/38* Where construction is adjacent to a highway, or is within 800m of highway & will generate major traffic	Building & Land Use permit issued by MTO Contact: Local or Regional Office of MTO	_____
Hospitals	Ministry of Health & Long Term Care	
☐ *Public Hospitals Act s. 4* Hospital buildings	Minister's approval of construction Contact: Ministry of Health Capital Planning 416-327-8725	_____
☐ *Private Hospitals Act s. 22* Where house used as a private hospital	Minister's approval of alteration or renovation Contact: Ministry of Health Capital Planning 416-327-8725	_____
Senior Citizens	Ministry of Health & Long Term Care	
☐ NURSING HOME LICENSING *Nursing Homes Act s. 4, 5* Construction, alteration or conversion of building to nursing home	License issued by Director, MOH Contact: MOH & Long Term Care Regional Office in your area	_____
☐ RETIREMENT HOMES *Homes for the Aged & Rest Homes Act s. 14* *Elderly Persons Centres Act s. 6* Where building used as a home for the aged	Minister's approval of construction Contact: Planning & Renewal Branch 1-877-767-8889	_____

DECLARATION BY APPLICANT

PLEASE CHECK THE APPROPRIATE LINE

☐ 1. None of the items listed apply to this project.

☐ 2. All applicable law approvals have been completed, and approval documents are attached to this application.

☐ 3. The proposed construction or demolition requires one or more applicable law approvals which have not yet been completed.

I have authority to act on behalf of the corporation or partnership with respect to this application (if applicable)

Name: Signature: Date:

Original – Municipality Copy – Applicant

APPENDIX 'J'

Document Check List

- **Alterations**
- **New Housing Residential**
- **New Buildings**

Sudbury Greater Grand

Document Submission Checklist - Alterations

Pursuant to Section G of an application to Construct or Demolish

Application no.	Address	Date

All Permit applications must be accompanied by drawings and other documents which clearly describe the proposed construction, in order to confirm that it will comply with the building code and other laws. This checklist identifies drawings and documents required for alterations or renovations to an existing nonresidential building.

ITEMS INDICATED BELOW AS [O] required MUST BE PROVIDED BEFORE THIS APPLICATION CAN BE PROCESSED

[✓] provided [X] not applicable [O] required

DRAWINGS & SPECIFICATIONS

General Information

- ☐ Designer Qualification / Registration Information
- ☐ All drawings drawn to scale and fully dimensioned
- ☐ Compass orientation
- ☐ Drawing Sets Required (2) residential
  (4) all others

Site Plan

- ☐ Showing unit location in building or area of work
- ☐ Adjacent tenant use shown

Architectural

- ☐ Existing floor plans showing construction and room & space identification
- ☐ Proposed floor plans for every level including basement
- ☐ Reflected ceiling plans
- ☐ Mezzanine plan, & construction details
- ☐ Barrier free entrance and washroom details (if building is barrier free accessible)
- ☐ Stair and washroom plan details
- ☐ Wall Sections, plan and section construction details
- ☐ Fire separations and listed design numbers
- ☐ Construction notes, door and hardware schedule, construction specifications
- ☐ Professional seal & signature on drawings (where exits, fire separations, exterior wall affected)

Structural

- ☐ Mezzanine floor framing plan
- ☐ Design specifications and loading criteria
- ☐ Roof and floor truss layout sealed by a P.Eng
- ☐ Professional seal & signature on drawings

Mechanical (HVAC & Plumbing)

- ☐ Coordinated HVAC floor plans (every level)
- ☐ Heat loss/gain calculations & duct design
- ☐ Equipment Specification
- ☐ Fire damper locations, kitchen exhaust equipment
- ☐ Plumbing and drainage plans showing all fixtures
- ☐ Specifications of plumbing and fire stopping materials
- ☐ Professional seal & signature on drawings

Electrical & Fire Protection

- ☐ Coordinated electrical floor plans .
- ☐ Coordinated floor plans showing all fire protection systems (sprinkler, fire alarm, standpipe etc.)
- ☐ Construction notes, specifications and schedules

Other Drawings

- ☐ _____
- ☐ _____
- ☐ _____
- ☐ _____
- ☐ _____
- ☐ _____

OTHER DOCUMENTS

- ☐ Commitment to General Reviews by Architect & Engineers
- ☐ Ontario Building Code Data Matrix
- ☐ Applicable Law Compliance Checklist
- ☐ Acknowledgement of incomplete application

_____
Application received by

Original – Municipality

Copy – Applicant

Sudbury Greater | Grand

Document Submission Checklist - Housing

Pursuant to Section G of an application to Construct or Demolish

Application no.	Address	Date

All Permit applications must be accompanied by drawings and other documents which clearly describe the proposed construction, in order to confirm that it will comply with the building code and other laws. This checklist identifies drawings and documents required for detached or semi-detached houses or townhouses.

ITEMS INDICATED BELOW AS [O] required MUST BE PROVIDED BEFORE THIS APPLICATION CAN BE PROCESSED

[✓] provided [X] not applicable [O] required

DRAWINGS & SPECIFICATIONS

General Information

- ☐ Designer Qualification/Registration Information
- ☐ All drawings drawn to scale and fully dimensioned
- ☐ Compass orientation
- ☐ Drawing sets required (2)
- ☐ Building Plans consistent with Site Plan
- ☐ Application work description consistent with drawings

Site Plan

- ☐ Zoning dimensions & areas
- ☐ Property lines shown
- ☐ Location & dimensions of proposed & existing buildings
- ☐ Proposed finished floor elevations
- ☐ Site grading plan (proposed & existing grades)
- ☐ Owner's & Lot Grading Professional Commitment (Lot Grading New Subdivisions)

Architectural

- ☐ Existing floor plans (required for additions/alterations)
- ☐ Floor plans for every level
- ☐ All room names identified
- ☐ Building elevations
- ☐ Building sections & wall sections
- ☐ Stairs, landings, decks, guards and handrail details
- ☐ Cathedral ceiling/roof detail
- ☐ Details & construction notes/specifications
- ☐ Townhouse block plans showing all units and firewalls
- ☐ Firewall & party wall sections & details

Structural

- ☐ Pre-engineered floor system layout
- ☐ Roof framing plan - conventional construction
- ☐ Roof truss layout and P.Eng sealed shop drawings
- ☐ Structural framing plans (on floor plans)

Mechanical (HVAC)

- ☐ Coordinated floor plans (every level)
- ☐ Heat loss/gain calculations & duct design
- ☐ Equipment Specification
- ☐ Ventilation design summary

Other Drawings

- ☐ _____
- ☐ _____
- ☐ _____
- ☐ _____
- ☐ _____
- ☐ _____
- ☐ _____

OTHER DOCUMENTS

- ☐ Geotechnical report (new subdivision)
- ☐ Approved Lot Grading Plan
- ☐ Mechanical Ventilation Design Summary
- ☐ TARION Registration Form
- ☐ Applicable Law Compliance Checklist
- ☐ Acknowledgement of incomplete application

_____

Application received by

Original – Municipality Copy – Applicant

Sudbury Greater | Grand

Document Submission Checklist – New Buildings

Pursuant to Section G of an application to Construct or Demolish

Application no.	Address	Date

All Permit applications must be accompanied by drawings and other documents which clearly describe the proposed construction, in order to confirm that it will comply with the building code and other laws. This checklist identifies drawings and documents required for a new building. Please refer to Schedule C of the Building Bylaw for further details.

ITEMS INDICATED BELOW AS [O] required MUST BE PROVIDED BEFORE THIS APPLICATION CAN BE PROCESSED

[✓] provided [X] not applicable [O] required

DRAWINGS & SPECIFICATIONS

General Information

- ☐ Designer Qualification/Registration information
- ☐ Professional seal and signature on drawings as required
- ☐ All drawings drawn to scale and fully dimensioned
- ☐ Compass orientation
- ☐ Drawing Sets Required (4)

Site Plan & Site Services

- ☐ Site Plan Approval documents

Architectural

- ☐ Floor plans for all levels, including basement, showing proposed construction and room & space identification, fire separations and listed design numbers
- ☐ Mezzanine plan, & construction details
- ☐ Enlarged stair and washroom plan details
- ☐ Reflected ceiling plans
- ☐ Roof Plan showing drainage, access, roof top screening
- ☐ Building Elevations & Sections
- ☐ Wall Sections, plan and section construction details
- ☐ Barrier free entrance and washroom details
- ☐ Exit stair enclosure details
- ☐ Construction notes, door and hardware schedule, construction specifications

Structural

- ☐ Geotechnical report
- ☐ Foundation, floor, mezzanine & roof framing plans
- ☐ Column and beam schedules, structural sections, details and material specifications
- ☐ Design specifications, loading criteria, reference to geotechnical report
- ☐ Pre-engineered structural drawings by others

Mechanical (HVAC & Plumbing)

- ☐ HVAC floor plans (every level)
- ☐ Equipment & Design Specifications
- ☐ Fire damper locations, kitchen exhaust equipment
- ☐ Plumbing and drainage plans showing all fixtures
- ☐ Specifications of plumbing and fire stopping materials

Electrical & Fire Protection

- ☐ Electrical supply & distribution floor plans.
- ☐ Floor plans showing all fire protection systems (sprinkler, fire alarm, standpipe, life safety)
- ☐ Construction notes, specifications and schedules

Other Drawings

- ☐ _____
- ☐ _____
- ☐ _____

OTHER DOCUMENTS

- ☐ Commitment to General Reviews by Architect & Engineers
- ☐ Ontario Building Code Data Matrix
- ☐ Flow Control Roof Drainage Declaration (Flat Roof)
- ☐ Confirmation of Energy Efficient Design
- ☐ Applicable Law Compliance Checklist
- ☐ Acknowledgement of incomplete application

_____

Application received by

Original – Municipality

Copy – Applicant

j/staff/CM/WorkforTim/Buildingpermitdocuments/drafts/drawingsubmissionchecklist-new buildings

APPENDIX 'K'

Ontario Architects Association (OAA)

- Practice Bulletin A-23
BCDS - Identifying Information Required for Permit Application
- Practice Bulletin A-9
OBC Data on Drawings

Ontario Association of Architects

Practice Bulletin **A.23**

A Series - Regulatory December 14, 2005

Building Code Designation System (BCDS) - Identifying Information Required for Permit Application

SUMMARY

As of January 1, 2006 Regulation 27 under the *Architects Act* requires that specific identifying information for the architectural practice and the architect exercising responsible control for the design activities be clearly identified on documents supporting an application for permit. This requirement was put in place by OAA Council so that unlike all other designers, architects do not have to complete Schedule (1) to the uniform permit application form. It is a recommended good practice that the identifying information be placed directly on the building code data matrix.

BENEFIT

- Avoid delays in issuance of building and demolition permits.
- Comply with identification requirements for the Building Code Designation System as outlined in Regulation 27 under the *Architects Act*.

BACKGROUND

- This practice bulletin focuses on the identification of the holder (holder of a certificate of practice, that is, the architectural practice) and the architect exercising responsible control for design activities as defined in Regulation 27 under the *Architects Act* on documents supporting the application for building or demolition permit. Other bulletins in this series will discuss the identification of holder and architect exercising responsible control over other design activities including:
    - General Review reports.
    - Changes after permit has been issued.
- The Regulation requires that the holder's name, address and Building Code Designation Number (BCDN) and the name, BCDN, seal and signature of the architect who exercised responsible control over the design activities be included in documents submitted to a chief building official whenever a design activity is provided.
- Identification requirements of the Building Code Designation System (BCDS) as outlined in Regulation 27 under the *Architects Act* are much simpler than those required as of January 1, 2006 of all other designers under the Ontario Building Code.
    - A holder's registration number, called the practice's Building Code Designation Number (BCDN), is the Certificate of Practice number of a holder that has met the registration requirements

195

(required insurance limits and 'building code qualified' architect (s) who is an officer, director, partner or full-time employee) and is so listed on the OAA BCDS Registry
    - An architect's identifying number, called the architect's BCDN, is the number which appears on the seal of an architect who has met the building code qualification requirements (successfully completed BCDS assessments or MMAH examinations for the category(ies) of buildings on which the architect will exercise responsible control over design activities) and is so listed on the OAA BCDS Registry.
- Application of the professional seal and signature of a member must be in accordance with Regulation 27 under the *Architects Act* and OAA Practice Bulletin A.1e.
- While the practice may choose to include the information in a number of ways, it is a recommended good practice that the required identifying information:
    - the architectural practice's BCDN (Certificate of Practice Number);
    - the architectural practice's name;
    - the architectural practice's address; and,
    - the architect's BCDN (Seal number and signature) be placed on the building code data matrix.
- The provision of the required information on the building code data matrix is recommended in order to foster consistency and a specific location that will be customarily the first place that building officials will look for the information.

PROCEDURE

- The building code data matrix contained in practice bulletin A.9 has been modified to accommodate the name, address and BCDN of the holder and the seal of the architect who exercised responsible control for design activities as required in Regulation 27 under the *Architects Act*. See modified OBC Data Matrix accompanying this practice bulletin which provides for placement of the identifying information on the first page across the top.
- Enter the name, address and Certificate of Practice number of the holder in the space provided. (note the statement which reads, *"the certificate of practice number of the holder is the holder's BCDN as required under the Building Code Designation System"* has been added to facilitate the permitting process).
- The architect who exercised responsible control for the design activities to apply seal and signature through the seal in the space provided. (note the statement under the seal which reads, *"the architect noted above has exercised responsible control with respect to design activities. The architect's seal number is the architect's BCDN as required under the Building Code Designation System"*) Note as well that the architect must be qualified for that building category under the BCDS and so listed on the OAA BCDS Registry.
- Care should be taken to differentiate between design activities (see definition below) and the balance of services if different architects exercise responsible control. For example, one architect may take responsibility for the overall design of the building, and will seal the

196

drawings in accordance with Practice Bulletin A.1.e., while another architect with a BCDN will seal the building code data matrix and take responsibility for the design activities.

DEFINITIONS

Design activities under the *Building Code Act*, 1992, S 15.11 (5) and (6)(5) ...

"1. Prepare a design or give other information or opinion concerning whether a building or part of a building complies with the building code, if the design, information or opinion is to be submitted to a chief building official in connection with,
i. an application for a permit,
ii. a request for the authorization referred to in subsection 8 (12) or (13), or,
iii. a report described in paragraph 2.
2. If a general review of the construction of a building or part of a building is required by the building code, prepare a written report based on the general review. 2002, c. 9, s. 27.(6) In subsection (5), 'design' includes a plan, specification, sketch, drawing or graphic representation respecting the construction of a building. 2002, c. 9. s. 27."

Responsible Control, (Regulation 27 under the *Architects Act*) means the degree of control described in section 57;

Section 57. "Every member shall exercise responsible control in accordance with the guidelines set out in Practice Bulletins A.15, A.15a and A.1d, published by the Association, dated March 14, 2005, accessible on the Association's website, www.oaa.on.ca, and available in printed copies from the Association's head office at 111 Moatfield Drive, Toronto, Ontario, M3B 3L6. O. Reg. 144/05, s. 5."

REFERENCES

This Practice Bulletin is one of a series on this subject, refer to the current List of Practice Bulletins for other bulletins in the series.

Regulation 27 under the *Architects Act*;
OAA Practice Bulletins A.1d; A.1e; A.15 and A.15a.

197

Ontario Association of Architects

Practice Bulletin **A.9**

A Series - Regulatory revised December 17, 2004

Ontario Building Code (OBC) - OBC Data on Drawings

SUMMARY
Appropriate practice in regard to communication of OBC related data when applying for building permit includes a systematic approach to assembly and presentation of the results of your code analysis.

BACKGROUND
This Practice Bulletin expands on and replaces Practice Bulletin A.9 revised April 2002.

Inconsistencies in applications for building permit have been indicated insofar as how Ontario Building Code (OBC) related data was being communicated from architects to municipal building officials.

A series of Practice Bulletins has been commenced which will provide members guidance on appropriate practice in matters concerning OBC when designing, preparing construction documents, applications for permit, general review and site reports.

This bulletin focuses on information to be provided, as applicable, on a set of drawings submitted for building permit application.

Additional information such as exiting widths and routes, fire separations and other augmenting data will be the subject of future Practice Bulletins in this series.

Locating the information in a conspicuous place on the drawings not only expedites the building official's review of the application but also informs others involved with the project (e.g. contractors, trades, consultants, etc.) about applicable OBC related issues.

PROCEDURE

- Establish in your practice a system that facilitates retrieval of the information to be shown on the application for building permit. This information is ascertained in the early design stages through your code analysis and confirmed through the design development and construction drawing stages.
- Consider using the OBC data matrix as your base standard, adapted as required to meet the specific requirements of each project.
- Establish a location for OBC data on the drawings (one of the top sheets is considered best) and make this your office standard.
- Coordinate with the mechanical, electrical and structural engineering

198

consultants and share with them the data based on your code analysis.

- Request that they similarly include on their drawings OBC related data pertinent to their disciplines, in accordance with the standards of their profession and specific to the project.
- If the data matrix is not located on the drawings (e.g. in a project booklet) ensure that the building name and address as well as your project number and date of issuance are inserted at the top of the matrix.
- Add exit capacity calculations either on the same drawing sheet as the matrix or separately, confirming that the exit capacity exceeds the occupant load.
- It may be preferable to provide more than one matrix chart for complex projects (e.g. underground parking garage Part 3; and townhouse Part 9 on same site). Adapt the matrix to clearly describe your project.
- Note code references under Parts 3 and 9 have been added to assist in checking requirements. You may prefer to omit these references and refer to only those specific sections that apply, or, in the alternative, you may prefer to omit them entirely. Customize the matrix to suit your specific needs.
- Don't forget to check the reference numbers every time there is a code change.

Refer to
Ontario Building Code Data Matrix Parts 3 & 9: PDF file (2 pp., 324 KB) Word file (2 pp., 116 KB)

This matrix represents selected elements from your detailed code analysis and presents a quick overview to the municipal building official of the key OBC factors concerning your design.

Item No.

1 Check whether the work will be regulated by Part 3, 9 or 11. Review the OBC data matrix and set out a brief description of the project. (E.g. Lester Pearson Elementary School.) Check whether the project is new or an alteration and/or addition. Identify if the use is changed.

2 Identify the major occupancy(s).

3, 4 Enter the building area and gross floor area in the spaces provided, and enter extent of new and existing. If a portion of the building is to be demolished, enter in the existing space only that portion which is to remain, such that the total of new and existing is the area of the final product.

5, 6 Identify and enter the number of storeys above and below grade, and the height of the building.

7 Enter number of streets and access routes.

8 Enter the OBC building classification.

199

9 Obtain information concerning the proposed sprinkler system from engineer and check the appropriate box.

10, 11 Obtain information from engineer and check the appropriate "yes" or "no" box for requirement of standpipe and fire alarm.

12 Obtain information from engineer and check the appropriate box relative to the adequacy of water supply for the fire protection services.

13 Check the appropriate "yes" or "no" box in regard to whether the building is a high rise building or not.

14 Enter the permitted and actual combustible/non-combustible construction information.

15 Note whether there are mezzanines, how many, where, and their areas – if none – enter N/A.

16 Provide design information as to the occupancy and occupant load per floor and whether it is arrived at on basis of the design of a building or a requirement of so many square meters per person.

If insufficient space at item 6, list occupancies in a separate table identifying occupancy and occupancy load per floor.

Cross reference to this table should be noted at item 16 of the matrix.

17 Check appropriate box for barrier free design, and if "no" is checked, provide an explanation of why not.

18 Check appropriate box in regard to hazardous substances to be used in connection with any of the occupancies in the project.

19 Enter in the spaces provided, the fire resistance rating required for floors, roofs and mezzanines, as well as the supporting members for these. In addition, enter the listed design numbers (e.g. ULC) of description for the horizontal assemblies and their supporting members.

Note that fire resistance ratings may change for different major occupancies in the building. If the table in the matrix will not accommodate the building, prepare a separate table and cross reference accordingly.

20 Establish the Project North orientation if different from the Compass North, and identify both on site plan.

Enter the spatial separation information in the appropriate columns for each elevation where applicable. Identify Exposed Building Face (EBF), Limiting Distance (L.D.), Length (L) and Height (H) of building in appropriate columns.

Utilize a separate table for spatial calculations if the project is

200

more complex than can be accommodated by the table in item 20. Cross reference accordingly to the separate table.

21 Enter other information that, in your judgment, will assist in expediting issuance of building permit.

Refer to
Ontario Building Code Data Matrix - Part 11 - Renovations of Existing Buildings: PDF file (2 pp., 225 KB) Word file (2 pp., 49 KB)

This matrix represents selected elements from your detailed code analysis and presents a quick overview to the Municipal Building Official of the key OBC factors concerning your design.

Item No.

11.1 After having ascertained that your project is regulated by Part 11, complete the information regarding existing building classification.

11.2 Identify extent of alteration as indicated.

11.3 Identify reduction (if any) in Performance level as indicated. Obtain necessary information regarding structural, plumbing and sewage systems from engineers.

11.4 Enter information regarding compensating construction if and where applicable.

11.5 Identify if compliance alternatives are proposed, and if they are, enter the appropriate numbers.

11.6 Identify if alternative measures are proposed, and if yes, explain what they are.

REFERENCES
Ontario Building Code 1997

201

Firm Name:
Certificate of Practice Number:
Enter address, tel
contact information
The Certificate of Practice Number of the holder is the holder's BCDN.

Name of Project:
Enter name

Location:
Enter address

Apply seal and signature

The architect noted above has exercised responsible control with respect to design activities. The architect's seal number is the architect's BCDN.

Item	Ontario Building Code Data Matrix Parts 3 & 9			OBC Reference	
1	Project Description: ☐ New ☐ Addition ☐ Change of Use ☐ Alteration	☐ Part 11	11.1 to 11.4	☐ Part 3 2.1.1	☐ Part 9 2.1.1 9.10.1.3
2	Major Occupancy(s)			3.1.2.1.(1)	9.10.2
3	Building Area (m²) Existing _____ New _____ Total _____			1.1.3.2	1.1.3.2
4	Gross Area Existing _____ New _____ Total _____			1.1.3.2	1.1.3.2
5	Number of Storeys Above grade ____ Below grade _____			3.2.1.1 & 1.1.3.2	2.1.1.3
6	Number of Streets/Fire Fighter Access _____			3.2.2.10 & 3.2.5.	9.10.19
7	Building Classification _____			3.2.2.20-.83	9.10.4
8	Sprinkler System Proposed	☐ entire building ☐ basement only ☐ in lieu of roof rating ☐ not required		3.2.2.20-.83 3.2.1.5 3.2.2.17	9.10.8
9	Standpipe required	☐ Yes ☐ No		3.2.9	N/A
10	Fire Alarm required	☐ Yes ☐ No		3.2.4	9.10.17.2
11	Water Service/Supply is Adequate	☐ Yes ☐ No		3.2.5.7	N/A
12	High Building	☐ Yes ☐ No		3.2.6	N/A
13	Permitted Construction ☐ Combustible ☐ Non-combustible ☐ Both Actual Construction ☐ Combustible ☐ Non-combustible ☐ Both			3.2.2.20-.83	9.10.6
14	Mezzanine(s) Area m² _____			3.2.1.1.(3)-(8)	9.10.4.1
15	Occupant load based on ☐ m²/person ☐ design of building Basement: Occupancy _____ Load _____ persons 1st Floor Occupancy _____ Load _____ persons 2nd Floor Occupancy _____ Load _____ persons 3rd Floor Occupancy _____ Load _____ persons **For Additional Floors, go to page 2**			3.1.16	9.9.1.3
16	Barrier-free Design ☐ Yes ☐ No (Explain) _____			3.8	9.5.2
17	Hazardous Substances ☐ Yes ☐ No			3.3.1.2. & 3.3.1.19	9.10.1.3(4)
18	Required Fire Resistance Rating (FRR)	Horizontal Assemblies FRR (Hours)	Listed Design No. or Description (SG-2)	3.2.2.20-.83 & 3.2.1.4	9.10.8 9.10.9
		Floors _____ Hours			
		Roof _____ Hours			
		Mezzanine _____ Hours			
		FRR of Supporting Members	Listed Design No. Or Description (SG-2)		

	Floors _____ Hours				
	Roof _____ Hours				
	Mezzanine _____ Hours				

19 Spatial Separation – Construction of Exterior Walls 3.2.3 9.10.14

Wall	Area of EBF (m²)	L.D. (m)	L/H or H/L	Permitted Max. % of Openings	Proposed % of Openings	FRR (Hours)	Listed Design or Description	Comb Const	Comb. Constr. Nonc. Cladding	Non-comb. Constr.
North										
South										
East										
West										

For Additional Walls, go to page 2

20 Other – Describe _____

15 (Continued)

_____Floor Occupancy _____ Load_____ persons
_____Floor Occupancy _____ Load_____ persons
_____Floor Occupancy _____ Load_____ persons
_____Floor Occupancy _____ Load_____ persons
_____Floor Occupancy _____ Load_____ persons
_____Floor Occupancy _____ Load_____ persons
_____Floor Occupancy _____ Load_____ persons
_____Floor Occupancy _____ Load_____ persons
_____Floor Occupancy _____ Load_____ persons
_____Floor Occupancy _____ Load_____ persons
_____Floor Occupancy _____ Load_____ persons
_____Floor Occupancy _____ Load_____ persons
_____Floor Occupancy _____ Load_____ persons
_____Floor Occupancy _____ Load_____ persons
_____Floor Occupancy _____ Load_____ persons
_____Floor Occupancy _____ Load_____ persons
_____Floor Occupancy _____ Load_____ persons
_____Floor Occupancy _____ Load_____ persons
_____Floor Occupancy _____ Load_____ persons
_____Floor Occupancy _____ Load_____ persons

19 (Continued)

Spatial Separation – Construction of Exterior Walls 3.2.3 9.10.14

Wall	Area of EBF(m²)	L.D. (m)	L/H Or H/L	Permitted Max. % of Openings	Proposed % of Openings	FRR (Hours)	Listed Design or Description	Comb Const	Comb. Constr. Nonc. Cladding	Non-comb. Constr.

Firm Name:
Certificate of Practice Number:
Enter address and
contact information here
The Certificate of Practice Number
of the holder is the holder's BCDN.

Name of Project:
Enter name here.

Location:
Enter address here.

Apply seal and signature here.

The architect noted above has exercised responsible control with respect to design activities. The architect's seal number is the architect's BCDN.

		Ontario Building Code Data Matrix – Part 11 – Renovation of Existing Building			OBC Reference
11.1	Existing Building classification:	Describe Existing Use: _____ Construction Index: _____ Hazard Index: _____ ☐ Not Applicable (no change of major occupancy)			11.2.1 T 11.2.1.1A T 11.2.1.1B to N
11.2	Alteration to Existing Building is:	Basic Renovation ☐ Extensive Renovation ☐			11.3.3.1 11.3.3.2
11.3	Reduction in Performance Level:				11.4.2
		Structural:	☐ No	☐ Yes	11.4.2.1
		By Increase in occupant load:	☐ No	☐ Yes	11.4.2.2
		By change of major occupancy:	☐ No	☐ Yes	11.4.2.3
		Plumbing:	☐ No	☐ Yes	11.4.2.4
		Sewage-system:	☐ No	☐ Yes	11.4.2.5
11.4	Compensating Construction:				11.4.3
		Structural	☐ No	☐ Yes (explain)	11.4.3.2
		Increase in occupant load:	☐ No	☐ Yes (explain)	11.4.3.3

		Change of major occupancy: ☐ No ☐ Yes (explain)	11.4.3.4
		Plumbing: ☐ No ☐ Yes (explain)	11.4.3.5
		Sewage System: ☐ No ☐ Yes (explain)	11.4.3.6
11.5	Compliance Alternatives Proposed:	☐ No ☐ Yes (give number(s)) _____	11.5.1
11.6	Alternative Measures Proposed:	☐ No ☐ Yes (explain) _____ _____	11.5.2

APPENDIX 'L'

OBOA Internship Program Announcement &
Minister John Gerretson's Letter on Memorandum of Understanding

From: "Ronald M Kolbe" <cao.oboa@bellnet.ca>
To: <guido.mazza@city.greatersudbury.on.ca>
Date: 12/20/2005 4:19:17 PM
Subject: The Ontario Building Officials Association Internship program is here & Updates

Ontario Building Officials Association President Terry Hewitson is pleased to announce that the OBOA INTERNSHIP PROGRAM is now ready and operational.

MEMORANDUM OF UNDERSTANDING

Between the ONTARIO BUILDING OFFICIALS ASSOCIATION
(hereinafter referred to as "OBOA")

-and-

HER MAJESTY THE QUEEN IN RIGHT OF ONTARIO AS REPRESENTED BY THE MINISTER OF MUNICIPAL AFFAIRS AND HOUSING
(hereinafter referred to as "MAH")

- WHEREAS MAH is responsible for administering the Building Code Act, 1992 and the Building Code (Ontario Regulation 403/97, as amended);

- AND WHEREAS Article 2.16.4.2 of the Building Code authorizes the Minister of Municipal Affairs and Housing to approve a building inspector internship program;

- AND WHEREAS Ontario recognizes the OBOA as a responsible and accountable professional Association with respect to matters within their jurisdiction;

- AND WHEREAS the OBOA wishes to establish a building inspector internship program;

read the entire Memorandum of Understanding on the OBOA website www.oboa.on.ca.

For INTERNSHIP information click on the Internship link.

OBOA Director Mike Seiling is the Internship Chair. Mike and his committee are responsible for the review and approval of Internship Applications.

Check the OBOA Director information for Mike Seiling's contact information.

MAH Minister, the Honourable John Gerretson described in April 2004 "as a man of honesty and integrity" is truly a man of his word.

Subsequent dealings with the Minister, his staff and MMAH staff have fortified this opinion many times over.

Check MAH website http://www.obc.mah.gov.on.ca/userfiles/HTML/nts_4_25959_1.html for the following announcement.

Internship Program
The Minister of Municipal Affairs and Housing has approved an Internship Program for building officials to be administered by the Ontario Building Officials Association (OBOA). Such programs are authorized by Article 2.16.4.2. of the Building Code. Further information and application forms can be found on OBOA's website at http://www.oboa.on.ca/.

Thanks to David Brezer, Al Suleman, Michael DeLint and all staff for their efforts.

OBOA's 50th Anniversary Conference will be held at the Sheraton on the Falls in Niagara Falls Ontario October 1-4, 2006.

The Sheraton Hotel has also guaranteed the conference room rate for 3 days prior and 3 days after the conference.

The Host Committee led by Co-Chairs John Castrilli & Keith Daw are preparing an exciting technical conference with many surprises.

The Monday night Theme Night will be a night to remember.

More information to follow.

Have a great holiday season everyone!

Best regards,

Ron

Ronald M. Kolbe, CBCO, AScT, MAATO
Chief Administrative Officer

"CBCO" the step above!

Minister of Municipal Affairs and Housing

777 Bay Street, 17th Floor
Toronto ON M5G 2E5
Tel. (416) 585-7000
Fax (416) 585-6470
www.mah.gov.on.ca

Ministre des Affaires municipales et du Logement

777, rue Bay, 17e étage
Toronto ON M5G 2E5
Tél. (416) 585-7000
Téléc (416) 585-6470
www.mah.gov.on.ca

Ontario

05-1428

December 16, 2005

Mr. J.T. (Terry) Hewitson
President
Ontario Building Officials Association
6770 Davand Drive, Unit 46
Mississauga ON L5T 2G3

Dear Mr. Hewitson: Terry

It is with pleasure that I return to you a signed copy of the Memorandum of Understanding for the establishment of an internship program to be administered by the Ontario Building Officials Association (OBOA).

I appreciate the significant efforts made by the OBOA's Internship Committee to develop the program and underlying infrastructure in advance of the January 1, 2006 compliance date for Building Code qualification and registration. I am confident that your members, especially those who have not met all Building Code qualification requirements, will also be appreciative of the association's efforts to support them with an internship program as they seek to continue to perform their functions within the context of the intern inspector provisions of the Building Code.

I value the ongoing and productive relationship my ministry has with the OBOA and thank you again for your support in the implementation the Building Code regulatory changes.

Sincerely,

John Gerretsen
Minister

Attachment

Internship

OBOA Internship Program

This program is aimed at equipping Municipalities in achieving full compliance with the Regulation for the current as well as future building department employees. Under this model, current employees will continue to perform their tasks in context of the Regulation under a *mentor* while new employees will be able to perform certain tasks while completing qualification requirements as set out by the *Review Committee*.

Internship Options

The internship program will consist of two tiers.

Tier 1 will encompass those qualifications, in part or in whole, which relate to "The House" qualification as set out in Part 2 of the Ontario Building Code. Specifically: "House", " Plumbing - House" "HVAC - House" and "On-site Sewage Systems".

Tier 2 shall comprise all other qualification categories such as Small Buildings", "Large Buildings", "Complex Buildings", "Building Services", "Building Structural", "Plumbing – All Buildings" etc. The legal qualification will either be obtained prior to Intern application or as a component of either Tier 1 or 2.

Internship Period

Tier 1 Interns may be enrolled for not longer than 18 months, except that a further period of 6 months may be added for personal hardship.

Tier 2 Interns may be enrolled for not longer than 12 months, except that a further period of 6 months may be added for personal hardship.

In consideration of diverse municipal conditions, enrolment in both tiers concurrently will be accepted. Interns may only participate once in each Tier.

210

Extenuating circumstances will be evaluated on a case-by-case basis.

Enrolment Criteria

Prior to enrolment in an Internship Program, an intern must have completed:

a) One of the Ministry's Legal/Process examinations (General, CBO, RCA or Designer);

b) Possess not less than five (5) years verified experience as a building official or building practitioner or

c) An equivalent combination of post-secondary education and experience in the area of practice.

The program is for Building Officials who are members of the OBOA, and who currently do not meet all of the requirements for the Provincial Qualification. This includes a chief of the fire department of the Municipality that is appointed as a building inspector by the municipal council, and is assigned specific responsibility for the enforcement of any portion of the Code respecting fire safety matters.

Foreign educated and trained applicants will be required to obtain OBOA membership and demonstrate applicable and equivalent-knowledge of Internship application requirements as set out by the *Review Committee*.

The *Internship Program* will include a *supervised* practical internship in addition to the necessary training to achieve Provincial Qualification. A provincially qualified inspector or chief building official as required by Article 2.16.4.2. of the Ontario Building Code will provide the mentorship. The mentor must be an OBOA member and will also need to demonstrate compliance with the procedures of a supervising and reporting program to be established between the OBOA, the *Mentor* (and /or the municipality) and the Intern for the purposes of monitoring the progress and fulfillment of the Internship.

Endorsement from the Chief Building Official or Municipal clerk is required on Municipal letterhead.

INTERNSHIP APPLICATION / PROCESS & DEFINITIONS		
INTERNSHIP APPLICATION	INTERNSHIP PROCESS	DEFINITIONS

211

APPENDIX 'M'

Public Information Packages

- **Sudbury (Detailed)**
- **Sudbury (General)**
- **Ministry of Municipal Affairs & Housing (General)**

Sudbury

IMPORTANT NOTICE

To Building Permit Applicants and Designers

BEGINNING JANUARY 1, 2006, DESIGNERS OF BUILDING PERMIT DOCUMENTS WHO ARE *NOT* LICENSED ARCHITECTS MUST:

- BE **REGISTERED** WITH THE MINISTRY OF MUNICIPAL AFFAIRS AND HOUSING
- POSSESS PROVINCIAL **QUALIFICATIONS**
- PROVIDE **INFORMATION** ABOUT THEIR QUALIFICATION AND REGISTRATION ON THE PERMIT APPLICATION FORM AND ON ALL DESIGN DOCUMENTS

MUNICIPALITIES ARE NOT PERMITTED TO ISSUE PERMITS APPLIED FOR AFTER JANUARY 1, 2006, UNLESS AFFECTED BUILDING DESIGNERS MEET THESE REQUIREMENTS. SOME DESIGNERS AND PROJECTS ARE EXEMPT, AS DESCRIBED BELOW.

REGISTRATION & QUALIFICATION EXEMPTIONS

- Designers are not required to be registered with the Ministry if they own the building they are designing, if they are a builder governed by the *Ontario New Home Warranties Plan Act*, or if the project is an addition to or alteration of a house.
- Designers are not required to be qualified by the Ministry if they are designing a house or an accessory structure not to exceed 50 m^2 to a house that they own, or if they are designing an accessory structure to any house that does not exceed 50 m^2 in area.
- Other projects are also exempt from registration and qualification requirements. A complete listing of exemptions is provided on the back of this form.
- Architects are qualified and registered by the Ontario Association of Architects, and are not required to be registered or qualified with the Ministry.

INFORMATION REQUIRED ON DOCUMENTS

Designers are now required to provide information about their registration, qualification, and design responsibility on Schedule 1 to the provincial application form, and on every document submitted for a building permit. A standard template has been developed to assist designers in providing the required information on drawings. This template or a similar facsimile may be incorporated into drawing title blocks. Where sets of drawings or specifications contain more than one page, this information is only required on all pages.

The undersigned has reviewed and takes responsibility for this design, and has the qualifications and meets the requirements set out in the Ontario Building Code to be a designer.

QUALIFICATION INFORMATION
Required unless design is exempt under 2.17.5.1. of the building code

NAME SIGNATURE BCIN

REGISTRATION INFORMATION
Required unless design is exempt under 2.17.4.1. of the building code

FIRM NAME BCIN

EXEMPTIONS TO DESIGNER REGISTRATION AND QUALIFICATIONS

This extract from the building code has been edited for clarity and is provided for convenience purposes only.

Registration of Persons Engaged in the Design Business

A person is exempt from **registration** if the person's *design activities* relate only to

(a) *construction* of a home as defined under the *Ontario New Home Warranties Plan Act* that will be constructed or sold by that person, if the person is a builder or vendor as defined in that Act and is registered under that Act,
(b) *Construction* of a *building* that is owned by that person.
(c) *construction* of a *farm building* that is
  (i) of *low human occupancy*
  (ii) of 2 *storeys* or less in *building height*, and
  (iii) has a *building area* of less than 600 m^2 (6460 ft^2),
(d) *the* extension, material alteration or repair of:
  (i) a detached house, semi-detached house, townhouse or row house containing not more than two dwelling units in each house, or
  (ii) a detached structure that serves a building described in Subclause (3)(d)(i) and does not exceed 50 m^2 (538 ft^2) in *building area*,
(e) a *sewage system* to be constructed by that person if the person is *registered* under Article 2.18.3.2,
(f) *construction* of tents described in Sentence 3.13.1.2.(2),
(g) *construction* of signs,
(h) *construction* of site services, including
  (i) surface drainage, and
  (ii) *plumbing* located underground, either outside a *building* or under a *building*,
(i) *construction* of a factory–built house certified to CAN/CSA-A277 "Procedure for Certification of Factory-Built Houses",
(j) *construction* of a mobile home conforming to CAN/CSA-Z240 Series "Mobile Homes",
(k) *construction* of a park model trailer conforming to CAN/CSA-Z241 Series "Park Model Trailers",
(l) *construction* of pre-engineered elements of a *building* if the design of the elements is carried out by a person competent in the specific discipline appropriate to the circumstances,
(m) *construction* of appliances, equipment and similar incidental components of a *building*, or
(n) *construction* of a *building* for which a permit under Section 8 of the Act is applied for or issued before January 1, 2006 and for which *construction* is commenced within six months after the permit is issued.

A person is exempt from registration if the person's *design activities* are with respect to a detached house, semi-detached house, townhouse or row house containing not more than two *dwelling units* in each house and the *design activities* relate only to

(o) *a plumbing system*
(p) a heating, ventilation and *air conditioning* system, or
(q) ancillary *buildings* such as garages.

Designer Qualifications

A person is exempt from **qualification** if his or her *design activities* relate only to

(a) *construction* of:
  (i) a detached house, semi-detached house, townhouse or row house owned by the person and containing not more than two *dwelling units* in each house, or
  (ii) an ancillary *building* that serves a *building* described in Subclause (i).
(b) construction of a *farm building* that
  (i) is of *low human occupancy*,
  (ii) is 2 *storeys* or less in *building height*, and
  (iii) has a *building area* of less than 600 m^2 (6460 ft^2)
(c) a *sewage system* to be constructed by that person and:
  (i) the person is *registered* under Article 2.18.3.2., or
  (ii) the *sewage system* is owned by the person,
(d) *construction* of tents described in Sentence 3.13.1.2.(2),
(e) *construction* of signs,
(f) *construction* of site services including
  (i) surface drainage, and
  (ii) *plumbing* located underground either outside a *building* or under a *building*,
(g) *construction* of pre-engineered elements of a *building* provided that the design of the elements is carried out by a person competent in the specific discipline appropriate to the circumstances,
(h) *construction* of appliances, equipment and similar incidental components of a *building*,
(i) *construction* of an ancillary *building*
  (i) that serves a detached house, semi-detached house, townhouse or row house if the house contains not more than two *dwelling units*, and
  (ii) that does not exceed 50 m^2 (538 ft^2) *building area*, or
(j) *construction* of a *building* for which a permit under Section 8 of the Act is applied for or issued before January 1, 2006 and for which *construction* commences within six months after the permit is issued.

In order to be qualified, all designers must successfully complete Ministry of Municipal Affairs and Housing examinations that test their knowledge of the legal and technical requirements of the Building Code related to their area of practice. Architects are qualified under the building code designation system administered by the OAA, and are not required to provide information about their qualification on the permit application form. **For more information about designer qualification requirements, contact the Ministry of Municipal Affairs and Housing Building and Development Branch at 416.585.6666 or www.obc.mah.gov.on.ca.**

SUMMARY OF DESIGNER REQUIREMENTS IN THE BUILDING CODE

Legend: [R] Registration or [Q] Qualification Required O Exempt [from Registration or Qualification]

Houses & Townhouses	Designed by	R	Q	Category of Qualification
New Building	Owner	O	O	
	'Tarion' Builder	O	X	House or Small Buildings
	Designers	X	X	House or Small Buildings
Extension, Alteration or Repair	Owner	O	O	
	Designers	O	X	House or Small Buildings
Deck or Porch	Owner	O	O	
	Designers	O	X	House or Small Buildings
Detached Garage with Dwelling above	Owner	O	O	
	'Tarion' Builder	O	X	House or Small Buildings
	Designers	X	X	House or Small Buildings
Accessory Building (< or equal to 50m^2 in building area)	Owner	O	O	
	Designers	O	O	
Accessory Building (> 50m^2 in building area)	Owner	O	O	
	Designers	X	X	House or Small Buildings
Plumbing System	Owner	O	O	
	'Tarion' Builder***	O	X	Plumbing - House or All Buildings
	Designers	O	X	Plumbing - House or All Buildings
Heating, Ventilation and AC Systems	Owner	O	O	
	'Tarion' Builder	O	X	HVAC - House or Building Services
	Designers	O	X	HVAC - House or Building Services
Factory-built house & Foundation	Owner	O	O	
	Designers	O	X	House or Small Buildings
Mobile Home &Foundation	Owner	O	O	
	Designers	O	X	House or Small Buildings
Park Model Trailer	Owner	O	O	
	Designers	O	X	House or Small Buildings
Second Suite Added to House	Owner	O	O	
	Designers	O	X	House or Small Buildings

Other Residential Buildings	Designed by	R	Q	Category of Qualification
New Small Building	Owner	O	X	Small Buildings
	Designers	X	X	
New Large Building	Owner	O	X	Large Buildings
	Designers	X	X	
New Complex Building	Owner	O	X	Complex Buildings
	Designers	X	X	
Structural System *(Small, Large & Complex Buildings)*	Owner	O	X	Building Structural
	Designers	X	X	
Plumbing System	Owner	O	X	Plumbing - All Buildings
	Designers	X	X	
Heating, Ventilation and AC Systems	Owner	O	X	Building Services
	Designers	X	X	
Electrical Systems and Fire Protection	Owner	O	X	Detection, Lighting & Power and/or Fire Protection
	Designers	X	X	
Extension, Alteration or Repair	Owner	O	X	Same as building type above
	Designers	X	X	

*****Note: In the City of Greater Sudbury, the requirement for qualification for a Plumbing Permit within a structure defined as a "house" in the Ontario Building Code is that they be a licensed plumbing contractor under our Licensing By-law #2004-350.**

SUMMARY OF DESIGNER REQUIREMENTS IN THE BUILDING CODE

Non Residential Buildings	Designed by	R	Q	Category of Qualification
New Building Part 9 *(Small)* buildings	Owner	O	X	Small Buildings
	Designers	X	X	
New Building Part 3 *(Large)* buildings	Owner	O	X	Large Buildings
	Designers	X	X	
New Building Part 3 *(Complex)* buildings	Owner	O	X	Complex Buildings
	Designers	X	X	
Extension, alteration or repair of above	Owner	O	X	Same as building type above
	Designers	X	X	
Structural System *(Small, Large & Complex Buildings)*	Owner	O	X	Building Structural
	Designers	X	X	
Plumbing System *(Small, Large & Complex Buildings)*	Owner	O	X	Plumbing - All Buildings
	Designers	X	X	
Heating, Ventilation and AC Systems *(Small, Large & Complex Buildings)*	Owner	O	X	Building Services
	Designers	X	X	
Electrical and Fire Protection Systems *(Small, Large & Complex Buildings)*	Owner	O	X	Detection, Lighting & Power and/or Fire Protection
	Designers	X	X	

Miscellaneous Structures	Designed by	R	Q	Category of Qualification
Farm Buildings of Low Human Occupancy, < or = 2 storeys in height and < or = 600 m^2 in building area	All Designers	O	O	
Other Farm Buildings	Owner	O	X	Same as building type above
	Designers	X	X	
Tents < or = 225 m^2 with no bleachers and/or no side walls	All Designers	O	O	
Other Tents	Owner	O	X	Small Buildings
	Designers	X	X	
Signs	All Designers	O	O	
Designated Structures in Subsection 2.1.2.	Owner	O	X	Building Structural
	Designers	X	X	

Miscellaneous Building Elements	Designed by	R	Q	Category of Qualification
Incidental Appliances and Equipment	All Designers	O	O	
Pre-Engineered Elements	Competent Person	O	O	
Site Services	All Designers	O	O	
Sewage Systems	Registered Installer	O	O	

Notes to this Summary:

1. **Registered** means registered with the Director of the Building and Development Branch of the Ministry of Municipal Affairs and Housing in accordance with Article 2.17.4.2. which includes the insurance coverage required under Subsection 2.21.2.
2. **Qualified,** for purposes of this document, means the designer has demonstrated the necessary knowledge of the Building Code Act and building code by successfully completing the examination program administered by the Ministry of Municipal Affairs and Housing in the category of qualification set out in Section 2.20. of the code.
3. **Categories of Qualification** means those categories listed in Table 2.20.2.1. of the building code.
4. **Designer** means a person who carries out design activities described in Subsection 15.11(5) of the Building Code Act.
5. **House** means a detached house, semi-detached house, townhouse or row house containing not more than 2 dwelling units per house.
6. **Accessory building** means a detached structure accessory to the main building on the same property.
7. **Small building** means a building less than or equal to 600 m^2 in building area, less than or equal to 3 storeys in building height, and used for Group C, D, E, F2 or F2 major occupancies.
8. **Large Building** means a building which is not a house or small building.
9. **Complex Building** means a large building which is a high building under Subsection 3.2.6. or a small or large building that contains an interconnected floor space to which any provision in Articles 3.2.8.3. to 3.2.8.11. applies.
10. **Architects** are exempt from the Ministry qualifications but are required to successfully complete the examination program of OAA.

Greater Grand Sudbury

NEW REQUIREMENTS FOR DESIGNER QUALIFICATIONS FOR HOUSE PROJECTS

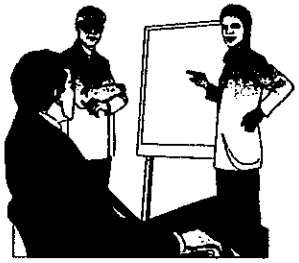

Recent changes to the Ontario Building Code will now require, as of July 1st, 2005, that the designers of certain construction projects must be prequalified in their knowledge of the Building Code by writing and passing technical exams. The qualifications will depend in part on the scope of the design activity being performed by the designer. Some projects may require several qualified designers to be involved, each one qualified in their limited scope of expertise (i.e. plumbing versus fire safety).

This bulletin focuses on the designer requirements for house(1) projects. For other project types, please see Section 2.17 of the Building Code.

The requirements for qualifications will vary based on whether it is the property owner or someone else who is taking responsibility for the design, and based on the nature of the project. Where the designer must be qualified, or must be a registered designer, please visit the web site of the Ministry of Municipal Affairs and Housing (http://www.obc.mah.gov.on.ca) to obtain more information about the qualification process.

WHERE THE DESIGNER IS THE OWNER OF A HOUSE(1)

No Pre-Qualifications Required

The owner of a house(1) is allowed to prepare and take responsibility for the design of the following projects, without having to be pre-qualified. The owner must still prepare plans and specifications in sufficient detail to demonstrate the project will comply with all technical requirements of the Ontario Building Code.

- Construction of their own new house(1)
- An addition to their existing house(1), including but not limited to the construction of a deck attached to the house
- A material alteration or repair of their existing house(1) including but not limited to alterations to create a new bedroom, alterations to the structural, plumbing, heating, ventilation or air conditioning systems, or alterations to create a second suite (subject to Zoning By-law compliance)
- Construction of an ancillary building such as a deck, shed, gazebo, pool cabana, hot tub shelter or garage
- Construction of site services such as surface grading around a building, or the underground plumbing services outside of or underneath a building
- Construction of a sewage system

Qualified Designer Required

An owner would need to possess the required technical qualifications(2) to design any other building structure on their property.

WHERE THE DESIGNER IS NOT THE OWNER OF THE HOUSE(1)

No Pre-Qualifications Required

Persons who prepare plans and specifications and take responsibility for the design of construction projects related to a house(1) need not be prequalified in their Building Code knowledge for the following projects.

- Construction of site services such as surface grading

OTHER CHANGES

Designers will be affected by other changes to the *Building Code Act, 1992*, and Building Code as of July 1, 2005. For example:

New permit application

A standard permit application will be used across Ontario. The new permit requires the designer's BCIN, and if applicable, the BCIN for theregistered firm.

Permit Timeframes

Timeframes have been established for the review of a building permit application. Principal authorities have prescribed time limits to review a building permit application, and decide whether to issue or refuse the application.

Inspections

The Building Code requires mandatory stages during construction where the building permit holder must notify the municipality of work completed. These notices are followed by mandatory inspections by the municipality, which are also subject to prescribed timeframes.

ADDITIONAL RESOURCES

Watch for other guides from the Building and Development Branch to assist the building industry prepare for the changes in building regulation and legislation that will come into effect on July 1, 2005.

Check the Building and Development Branch website for regular updates on the *Building Code Act, 1992*, the Building Code, training, publications and more.

Sign up for **CodeNews**, a free Internet-based newsletter issued by the Building and Development Branch. CodeNews sends e-mail newsletters about information related to the Building Code. To sign up, visit the web site and click **CodeNews**

Apply for Ministry examinations online. Click the "Qualification and Registration" link on the website:
www.obc.mah.gov.on.ca

Ontario

Building and Development Branch
Ministry of Municipal Affairs and Housing
777 Bay Street, 2nd Floor
Toronto, ON
M5G 2E5
Phone (416) 585-6666
Fax (416) 585-7531
codeinfo@mah.gov.on.ca

March 2005
ISBN 0-7794-7624-7

Ontario

MINISTRY OF MUNICIPAL AFFAIRS AND HOUSING

BUILDING AND DEVELOPMENT BRANCH

A guide to the changes in the *Building Code Act, 1992* and the building code affecting designers

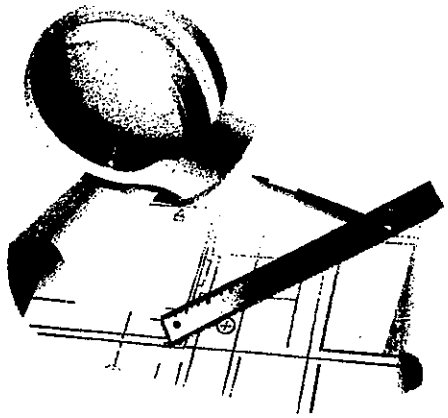

Who should use this guide?

- Persons who design buildings where a building permit is required

218

WHAT IS NEW FOR DESIGNERS?

Beginning July 1, 2005, a number of changes in the *Building Code Act, 1992* and Building Code will affect designers. Among other changes, designers may be required to be registered and/or qualified.

Who is a designer?

Designers are individuals who:

- prepare designs or give information/opinions about whether a building or part of a building complies with the Building Code, where such information is submitted as part of a permit application.
- prepare written reports on building construction based on a general review, where required by the Building Code.

Under the new legislation, designers may need to be qualified. Read section 15.11(5) of the *Building Code Act*, 1992 and section 2.17 of the Building Code for more details. The Building Code has been further amended to recognize the Ontario Association of Architects' establishment of a parallel system to evaluate Building Code knowledge.

Design firms

Firms engaged in the business of providing design activities to the public may need to be registered. A design firm may be a sole proprietor, a partnership, or a corporation. Examples include engineering and interior design firms that provide design services.

A municipality may not issue a building permit if the designer is not appropriately qualified and/or registered.

HOW TO BECOME QUALIFIED

Designers must be qualified, unless they are exempted under the Building Code. To become a qualified designer, you must:

- successfully complete the Ministry of Municipal Affairs and Housing examination program in your area(s) of practice, and
- file your examination information with the Director of the Building and Development Branch. (Note: designers who work for registered design firms do not need to file separately.)

Once you apply for an exam, you receive a BCIN (Building Code Identification Number). You will later need this number in order to complete the process to become qualified, and to submit permit applications.

Exemption from qualifications

The Building Code lists a number of exemptions to the qualification requirement. For example, you may be exempt if you are designing:

- a house that you own
- certain farm buildings
- certain tents and signs

You can only carry out design activities in areas of practice for which you have the required qualifications.

Please refer to the *BUILDING CODE ACT, 1992* and Building Code for specific requirements

HOW TO BECOME REGISTERED

Design firms must be registered, unless they are exempted under the Building Code. To become registered, a design firm must:

- ensure that all persons working in the firm who will review and take responsibility for design activities have successfully completed the exam program for their area(s) of practice;
- file its qualification information with the Director of the Building and Development Branch;
- carry insurance, as required by subsection 2.21.2 of the Building Code;
- After filing, the firm will receive a BCIN

Registrations are renewed annually.

Individuals who run their own design business may need to be registered.

Exemption from registration

The Building Code lists a number of exemptions to the registration requirement. For example, you may be exempt from registering if your firm's activities are:

- related to designing homes governed by Tarion (*Ontario New Home Warranties Plan Act*) where the design work is done "in-house"
- related to commercial, industrial or institutional buildings you own
- for certain house renovations
- for some farm buildings, tents and signs

However, designers exempt from registration may still need to be qualified as individuals.

- Fire damage - structural - plans exam in field.

HVAC

1) If not to plans - need as builts
2) If covered need - Final Letter of General Conformance.

Sudbury Greater Grand

Interoffice Correspondence

December 21, 2005

TO: **BUILDING SERVICES STAFF**

FROM: **G. A. Mazza**

RE: **Bill 124 Implementation**
Second Phase (Final) - January 1, 2006

As you are aware January 1, 2006, marks the second and final phase of the implementation process for the new Building Code regulatory changes commonly referred to as Bill 124. We will be accepting building applications up to December 30, 2005, from design professionals and non-design professionals without the requirements for qualifications as outlined in the Bill 124 Ontario Building Code changes.

We may receive a significant increase in application volume in the final days leading up to the January 1, 2006 deadline. Therefore, we may have some drop-off applications submitted prior to us accessing the building permit application costs or development charges when applicable. We will process these applications as per our normal practice to ensure they receive a 2005 application/permit number. We will provide the applicant the fees owing as expeditiously as possible in order that they can provide us the fees.

Further, once all approvals are obtained and the only impediment to permit issuance is the permit application or development charges fees, the applicant will be called and informed by the Permit Services Clerk that he will be provided a week to come in and pay the fees. At the end of that week if the fees have not been provided, the file shall be brought to the attention of the Chief Building Official and the application will be subject to review and may be subject to revocation based on the non-payment of these application fees.

The following procedures will attempt to ensure that individuals are not stock piling applications and that applications are legitimate applications for construction projects to be started within six months of issuance as per the Ontario Building Code Act.

Trusting this memorandum is self explanatory but should you have any further questions, please do not hesitate to come and see me.

GUIDO A. MAZZA, P. ENG.
DIRECTOR OF BUILDING SERVICES/
CHIEF BUILDING OFFICIAL

GAM/vk

* Delay in car wash building irks owner

Tom Sasvari
The Recorder

MINDEMOYA — A Mindemoya businessman is furious with Central Manitoulin Township, after stop work order was put on his business, resulting in a delay of construction of his new car wash.

The delay cost the businessman several thousands of dollars.

"I had asked that this issue be on the Economic Devel nt Committee

..Delay in car wash building irks owner

ontinued from page 1)

eeting first Thursday of e month, but you have sisted that this meeting ke place tonight," said eeve Richard Stephens at council meeting last week. Since tonight's meeting genda had already been ed, it is up to council will hear your delegation," he told Wayne egge.

Councillor Steve Orford uggested that normally this sue would be forwarded to e township Finance ommittee, but since all of ouncil was in attendance, I will put forward a motion allow the delegation to be ade."

"Last Thursday morning, I ad a stop work permit put n my building," stated Vayne Legge. "It was illeal to put up, without giving e contractor or owner of e property notice of this rior to this taking place. I ad to send home my conrete workers and other orkers."

"This cost me $5,700 for e concrete guys, and from ere they are two days ehind schedule," stated fr. Legge. "The action ken was very unprofes- and unethical."

en you are having mething built, every hour ounts to try and keep ings on schedule," said fr. Legge. "Our building spector is very unliked in he goes about stuff."

"As a young person trying to do something to benefit the community, the roadblocks I have had from township staff have been unbelievable," stated Mr. Legge. "Not just me, but everyone, especially when someone is trying to develop their business."

"I have received no assistance from the township on this whole thing," said Mr. Legge. "Or ever been offered any help. Nobody from the office has helped. It is hard for a person who is 26 to pen a new business, borrow a lot of money to buy my dad's business, and try to open another business, and then lose $6,000 with construction being delayed. How would anyone here feel if it happened to you?"

It was pointed out no building permit had been given for construction of Mr. Legge's new business to take place.

"I can tell you we very much appreciate your effort and the progress you are making in getting a new business going in the community," stated Mr. Stephens. "But, we had no idea you needed our...did you ask for help?" asked Mr. Stephens. "On any number of projects in the township we are more than willing to provide help. You have said you did not

WAYNE LEGGE

ask township staff and are just not getting help?"

"I believe the former township building inspector, Gerry Strong, did a very good job of negotiating with contractors and business owners," said Mr. Legge. "But, I understand there have been more stop work orders given out in the last year than in the history of the township. Yes, maybe we should have asked for help. But was help offered, no."

"The business community in the township needs a little more help and support from the township," said Mr. Legge.

Owen Legge, pointed out his son, Wayne, "is young, but at the same time he did a severance of the property. The building inspector knew he was building a car wash, but didn't help him or let him know this (stop work order) was going to should be able to get help and the service they need from the township when they are creating new businesses in the community."

He pointed out his son had brought in all the engineering plans for township staff to review. "But instead of service the township came with enforcement."

Mr. Stephens suggested, "We need to sit down to hear the errors you (Wayne Legge) have found in trying to do the work that you want to, and what help and assistance the office did or didn't provide."

Mr. Legge questioned what council's opinion is of the stop work order. "There is no way we can answer this," said Mr. Stephens.

Mr. Legge then told council that because the township hydro lines run across his property, he could cut off the power to the township office next Friday morning. "And hydro knows this," he said.

"This will not help with communications with the municipality," stated Councillor Steve Orford.

However, Mr. Legge told council, "I would never cut your hydro. This would be very low, and unethical. But, I could have hydro cut. But, I have a $6,000 bill, because of the stop order put on the project."

"We are more than willing to sit down with you and open up the lines of communication that are not there, get comments from staff, and get the whole story," suggested Mr. Stephens.

"I don't feel you will get the full story from staff," stated Mr. Legge. "There are a lot of thing that happen in the office that council never hears. A better process is needed."

Central Manitoulin building superintendent Andrew O'Reilly, when contacted by the Recorder, declined comment on the issue.

NOTICE

TO THE PERSON who left the 8 bags of dirty diaper garbage and 2 bags of can garbage: Please remove from our property on

DEATHS

MARIE NOLETTE (RUSSELL) STEVENS

In Loving Memory of Marie Stevens, who passed away on April 5th, 2008, at Moose Jaw, Saskatchewan. Marie grew up in Elizabeth Bay, her parents the late Wm. & Rebecca Russell; she is survived by her loving husband Hugh and three sons and one daughter, as well as grandchildren and brother Melvin of Elizabeth Bay. Predeceased by her oldest son, brother Teasdale, sisters Lizzie and Annie. Remembered with love.

CHRISTOPHER ANDREW GREENMAN

In Loving Memory of Christopher Andrew Greenman, July 23, 1971 - April 23, 2008. Chris Greenman, a resident of Barrie Island and Meaford, passed away at Espanola at the age of 36 years. He was born at Mindemoya, son of Lance and Lillian (McColeman) Greenman. Chris had been working in construction in Meaford for the past 5 months. Chris' world revolved around his son Jaden and music. He will be sadly missed by all who knew and loved him. Loved son of Lance and Lillian of Barrie Island, loving and loved father of Jaden, dear brother of Natalie and her husband Roger Hayden of Lively, Terry and his wife Carolyn of Gore Bay and Patrick and his wife Sheri of Meaford. Also will be missed by many aunts, uncles, cousins and nieces and nephews. Friends called at the Culgin Funeral Home on Saturday, April 26, 2008. A private family service was conducted later. In remembrance, donations to an Education